SmartStep™ Actuators

100% Continuous Duty Cycle, 100% Modulation, ON/OFF, DC Brushless, Modular, Hazardous Location Rated Electric Actuators

X-Series & S-Series

Installation, Operation, and Technical Reference Manual

Table of Contents

Safety Ratings **4**

Certifications **4**

Section 1: SmartStep Introduction **5**

1.1 The Actuators & Module Options 5

Section 2: Mechanical Overview **6**

2.1 X-Series Mechanical and Install Dimensions 6
2.2 S-Series Mechanical and Install Dimensions 7

Section 3: Interface, Home, and Diagnostic Screens **8**

3.1 XCTRL/SCTRL Interface 8
3.2 XCTRL Port/Connection Reference 9
3.3 Basic User Menu Map 10
3.4 MAIN Screen Elements 10
3.5 Super Cap Voltage Screen 11
3.4 Diagnostics 2 Screen 11
3.5 Diagnostics 3 Screen 11
3.6 Diagnostics 4 Screen 11
3.7 Diagnostics 5 Screen 11
3.8 Device Information Screen 11

Section 4: Standard Operational Modes & Wiring **12**

4.1 Manual Mode 12
4.2 Auto Mode: 1-Wire Control Signal 12
4.3 Auto Mode: 2-Wire Control Signal 13
4.4 Auto Mode: 4-20mA Signal Control 14
4.5 Auto Mode: MODBUS RTU 15
4.7 Auto Mode: MODBUS TCP 16
4.8 Auto Mode: On-Off 17
4.9 Override Mode 18
4.10 Status Relay Wiring 19

Section 5: Initial Setup / End Point Calibration **20**

5.1 Initial Setup 20
5.2 Basic End Point Calibration 20
5.3 Automatic End Point Calibration 20
5.4 Failsafe Setup 20

Section 6: Advanced Configuration Screen Map **21**

6.1 Advanced Configuration Access 21
6.2 Menu Navigation Button Reference 21
6.3 Menu Map 22

Section 7: Position Setup [PS] Tree **23**

7.1 Position Setup Screen 23
7.2 Failsafe Setup Screen 23
7.3 Speed Setup Screen 23
7.4 Misc Screen 23

Section 8: 4-20mA [MA] Setup Tree **24**

8.1 4-20mA Control Calibration Screen 24
8.2 Output DAC Calibration Screen 24
8.3 4-20mA ADC Calibration Screen 24
8.4 J2 Format Screen 25

Section 9: Power Management Tree **26**

9.1 Motor Screen 26
9.2 Controls Screen 26
9.3 Controls Screen 26

Section 10: MODBUS Setup Tree **27**

10.1 MODBUS RTU Setup Screen 27
10.2 MODBUS TCP Screen 27
10.3 MODBUS Opt Setup Screen 27
10.4 MODBUS Register Map 28

Section 11: Status Relay Setup Tree **29**

11.1 Error Status Relay Setup Screen 29
11.2 Open Status Relay Setup Screen 29
11.3 Close Status Relay Setup Screen 29

Section 12: Misc Setup Tree **30**

12.1 EMI Noise Filters Screen 30
12.2 Units Screen 30
12.3 Security Screen 30

Section 13: OPEN/CLOSE Setup Tree **31**

13.1 1-Wire Setup Screen 31
13.2 2-Wire Setup Screen 31
13.3 ON-OFF Setup Screen 31
13.4 OC Timer Control Setup Screen 32
13.5 OC Input Delay Setup Screen 32

Section 14: Wifi Setup Tree **33**

Section 15: Factory Setup Tree **34**

15.1 Restore Defaults Screen 34
15.2 Keypad Test Screen 34
15.3 4-20 Loopback Test Screen 34
15.4 Mac Address Screen 34

Section 16: Manual Override Handle Option **35**

Section 17: XCTRL Fault Codes **36**

17.1 Error fault codes 36

Section 18: Troubleshooting **37**

18.1 General Issues 37
18.2 J1 OPEN/CLOSE Issues 37
18.3 4-20mA/0-10VDC Issues 38
18.4 MODBUS Issues 38

Document History

Revision	Date	Notes
1.0	April 14, 2020	Initial Release. Support of Firmware Version 1.4.1
1.1	April 29, 2020	Added Information to support Firmware Version 1.4.2
1.2	May 12, 2020	Added Information to support Firmware Version 1.5.1
2.0	Sep 23, 2021	Added Information to support Firmware Version 3.4.1
2.1	Jan 26, 2022	Added Information to support Firmware Version 3.5.0
2.2	Sep 19, 2022	Added Information to support Firmware Version 3.8.0
3.0	Jun 23, 2023	Added Information to support Firmware Version 3.8.1. Revamped document layout
4.0	Jan 27, 2024	Complete Revamp to support version 4.x.x and up Firmware versions.
4.1	Feb 8, 2024	Added information for manual override handle and default MODBUS protocol settings

For questions or help contact your local sales rep or reach out to us at:

314-432-3282
sales@update-systems.com
joe@update-systems.com

Safety Ratings

Failure to comply with the following limits may result in physical damage to actuator or possible harm to installation technician. It may also result in voided warranty and incur additional repair/shipment costs.

Mechanical

Cover Bolts: ¼-20 18-8 Stainless Screw (installed at factory). Should not be tightened with anything greater than 15 in-lbs of torque

Module Screws: 6-32 18-8 Stainless Screws (installed at factory). Should not be tightened with anything greater than 9.6 in-lbs of torque. Screws have threadlock applied to them before being tightened down; when removing start slow to lessen risk of breaking screw.

F07 Valve Mounting: Holes are threaded for M8 x 1.25 screws. The bolts will be provided by distributor or end user. Follow guidelines based on material of screw. Typical tightening torque is 160 in-lbs. All four bolts with lock washers should be used to secure valve.

F10 Valve Mounting: Holes are threaded for M10 x 1.5 screws. The bolts will be provided by distributor or end user. Follow guidelines based on material of screw. Typical tightening torque is 300 in-lbs. All four bolts with lock washers should be used to secure valve.

Conduit Input: Holes are threaded for ½ - 14 conduit. Conduit should be tightened using 15 in-lbs of torque. If using pipe thread sealant or teflon tape, conduit should be tightened 2-3 turns with a wrench past finger tight for best seal.

Coupling: Coupling is designed for 27mm diameter valve stem or adapter. If adapter or valve stem do not easily slide into coupling, do not attempt to hammer in to place as it will damage the gearbox. Either attempt a new adapter or reach out to local distributor for assistance.

Electric/Wiring

Panel Fuse: Size fuse to respective power input. Max 4A fuse

PS048/XCTRL Power Input: 48VDC | ~1.67A max current draw (connector supplied)

PS024 (or PSUNI 24VDC Input) Module Power Input: 24VDC | ~3.3A max current draw. 12-24 AWG Input. Size wire appropriately for length of run.

PS120 (or PSUNI 120VAC Input) Module Power Input: 100-240VAC | ~0.47A | 50/60Hz. 12-24 AWG Input. Size wire appropriately for length of run.

XCTRL Terminal Block Inputs: Voltages vary per terminal. Refer to Section 3.2 for terminal ratings. 14-28 AWG Input. Size wire appropriately for length of run.

Note: Full actuator has ability to draw less when not moving the valve if power is an issue. Actuator may be put into low power mode which will turn off the holding torque of the motor after movement completes. Should only be used in low-pressure situations.

Environmental

Operating Temperature: -40°C to 60°C (-40°F to 140°F)

Certifications

- CE Certified
- UL/CUL Certified. File: E352420
- UL Class 1, Div 2, Groups A, B, C, D Hazardous Location Rated. File: E511689

Warranty

All SmartStep™ actuators and modules are covered by a 2-year warranty that covers standard actuator operation and workmanship. The warranty expires 24 months from delivery date.

If an actuator is not operating in the expected manner, please reference the trouble-shooting section of this document.

If further assistance is needed contact your local distributor or **nickn@update-systems.com**

If an actuator has failed under normal operation you may request a return material authorization through the distributor through which the actuator was purchased.

Section 1: SmartStep Introduction

1.1 The Actuators & Module Options

The SmartStep actuator is available in two different sized housings and five different torque options. The X-Series is in a larger casting that is suited for F07 and F10 ISO mounted valves that are rated between 500-5000 in-lbs. The S-Series is roughly 20% smaller than the X-Series and is suited for F05 and F07 ISO mounted valves that are rated between 400-1200 in-lbs. Note: As of the creation of this document revision, the S-Series is in the prototype stages and should be released by Q1 of 2024.

Both actuators use the same power input modules. The modules may be configured for 24VAC, 24VDC, or a 24VDC & 100-240VAC universal input module to allow stocking of a single supply.

Both power modules, if ordered with the -EPB option may be configured with a SuperCap backup. The capacity of the EPB currently allows any of our modules to move 90° to their Failsafe position during an power loss or control signal loss. The smaller models will be capable of moving more than that as the lower torque requires less power draw. ****To be capable of providing proper power for failsafe, a unit with a supercap must be powered and actively moving the motor for at least 60 seconds for the module to charge.**

The SmartStep control module (XCTRL) and the power supply modules (PS024, PS024-VAC, and PSUNI) are all designed to be field replaceable. If there is a failure on one of those modules, or if a 24VDC power input module needs to be swapped to a 120VAC power input module, it's as simple as removing a few cable connections and three screws. So if there is an issue, reach out to find out if a module can be replaced so that the entire actuator doesn't have to be sent back.

Representation of PSUNI-EPB Module

Representation of PS024-EPB Module

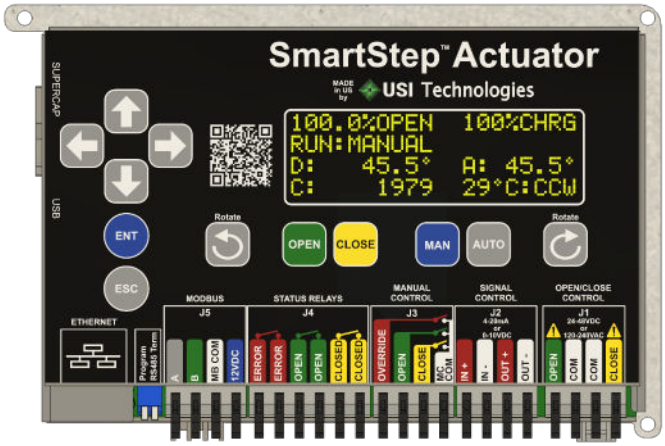

Representation of XCTRL Module

Section 2: Mechanical Overview

2.1 X-Series Mechanical and Install Dimensions

Front

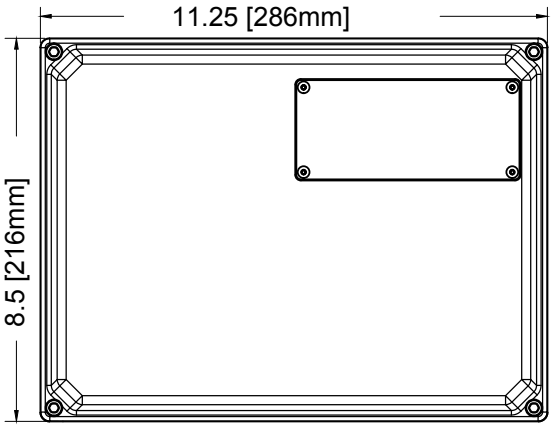

Rear

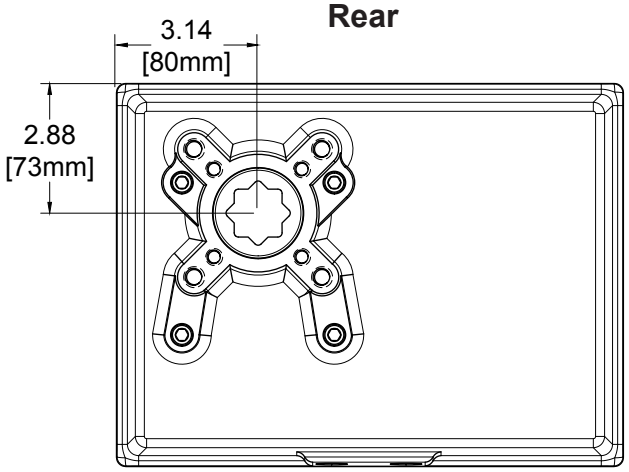

Bottom

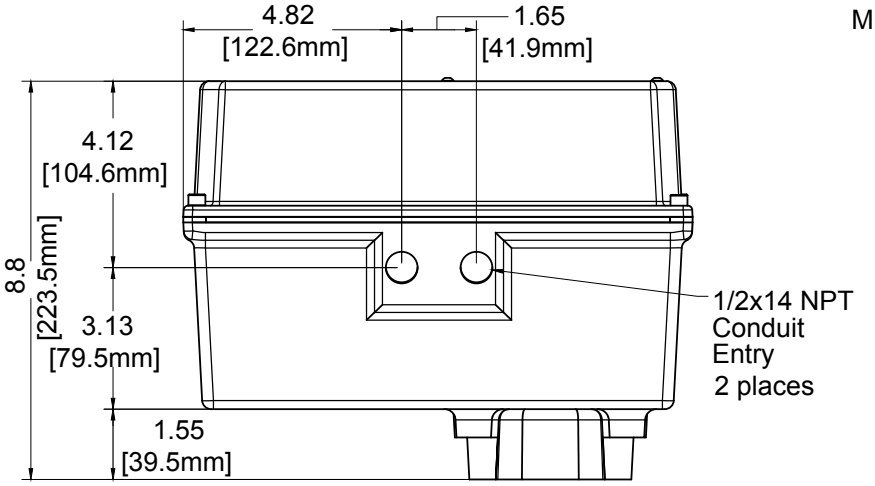

Note: add 3.5" [89mm] clearance for cover removal.
Cover removal also requires 3/16" Allen Wrench

X-Series Mounting Detail

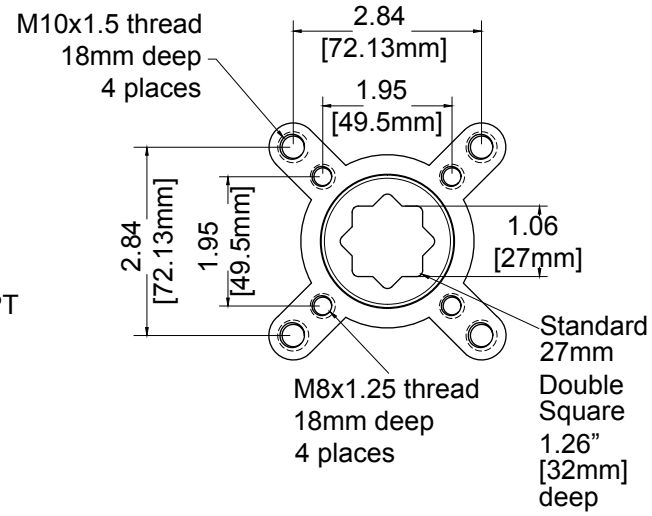

Valve Direction reference: At any point in this document when valve movement Clockwise or CounterClockwise is mentioned, it is always referenced viewing the actuator as shown in **Front View.**

Clockwise

Counter Clockwise

2.2 S-Series Mechanical and Install Dimensions

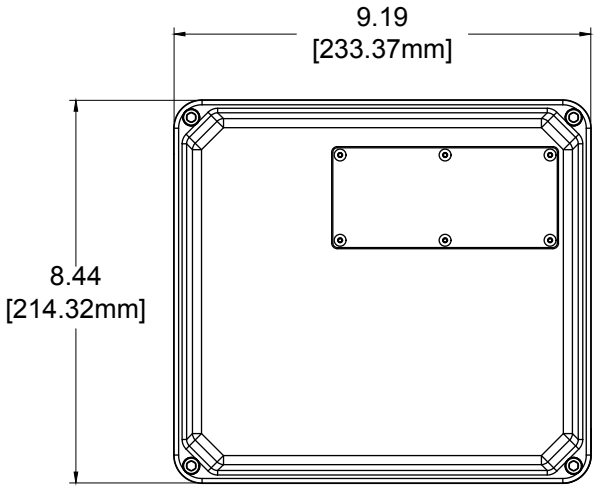

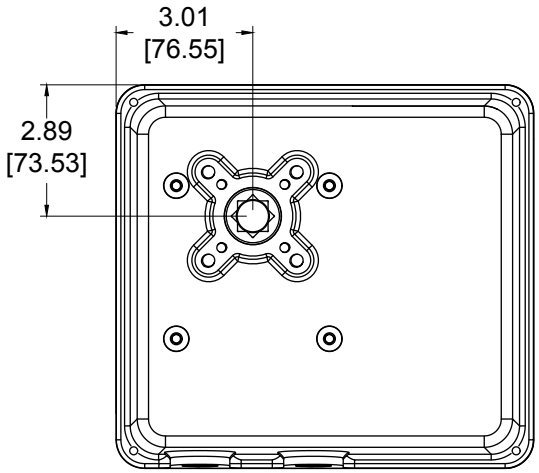

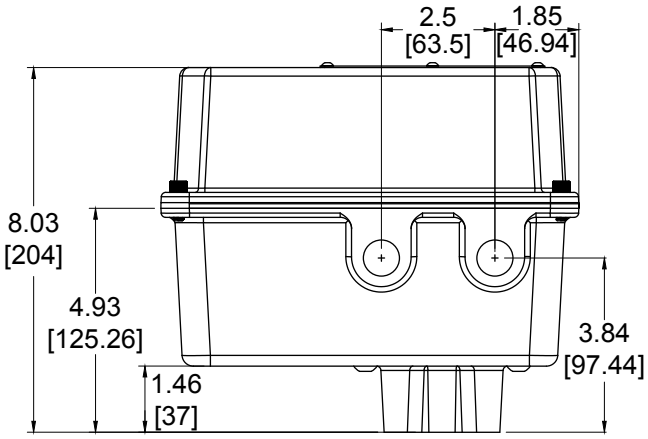

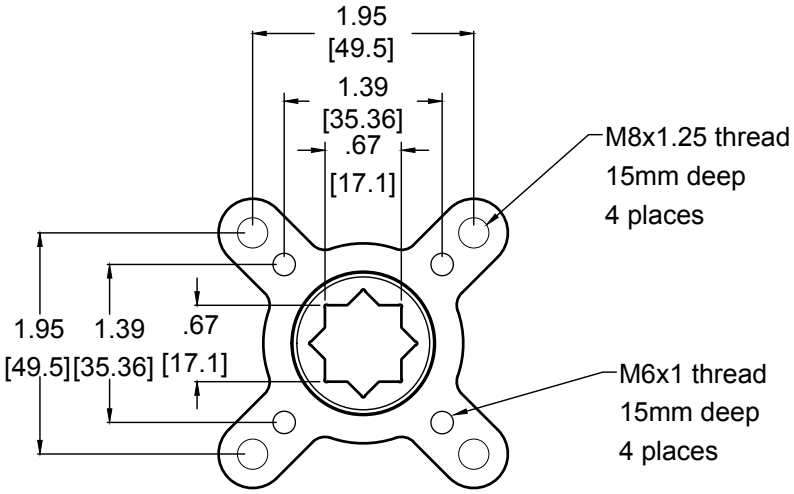

Valve Direction reference: At any point in this document when valve movement Clockwise or CounterClockwise is mentioned, it is always referenced viewing the actuator as shown in **Front View.**

Clockwise

Counter Clockwise

Section 3: Interface, Home, and Diagnostic Screens

3.1 XCTRL/SCTRL Interface

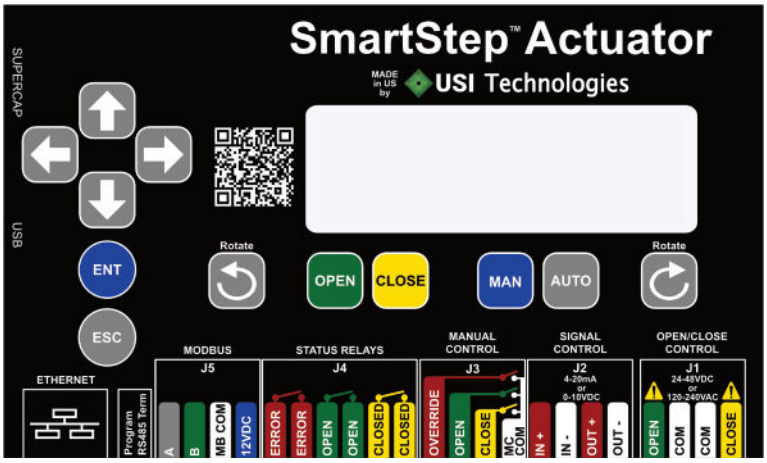

XCTRL Module Keypad

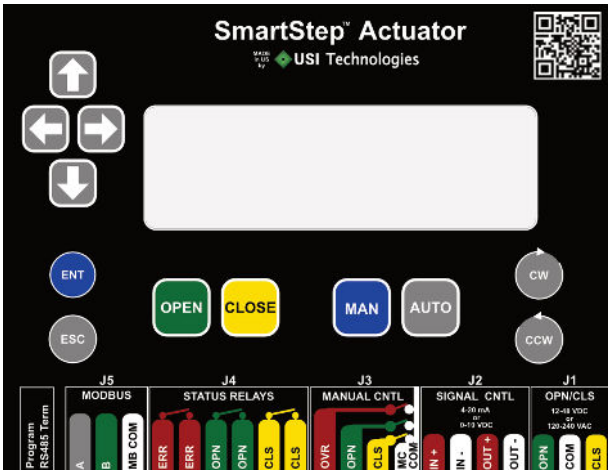

SCTRL Module Keypad

Buttons	
↑ ↓ → ←	Use to navigate menus and set values
ENT	Store Values/Confirm
ESC	Cancel Entry/Back out of Menu
↺ ↻	During position calibration, press to set direction valve moves to open when in settings
MAN	Manual Mode
OPEN	Hold or press to move in the direction of calibrated open position
CLOSE	Hold or press to move in the direction of calibrated closed position
AUTO	Cycle between Automatic Modes (press ENT once proper mode selected)
Button Combinations	
ESC + →	From Main Screen, enter Calibration Mode
ESC + OPEN	In manual mode, move valve to 100% open
ESC + CLOSE	In manual mode, move valve to 0% open
↑ + OPEN	On 4-20mA Calibration Screen, clear OPEN value
↑ + CLOSE	On 4-20mA Calibration Screen, clear CLOSE value

3.2 XCTRL Port/Connection Reference

Acceptable Wire Gauge Sizes for All Wire-to-PCB terminals: 14-28 AWG Input. Size wire appropriately for length of run

Port & Functionality	Port Rating	Pin	Pin Description
J1 - Open/Close Control: offers three modes of operation. For more detail go to Open/ Close Mode	24-48 VDC 120-240 VAC 1A max	1	**OPEN**: +120 VAC Signal applied when valve needs to move to OPEN position
		2,3	**COMMON**: 120 VAC Neutral
		4	**CLOSED**: +120 VAC Signal applied when valve needs to move to CLOSED position
J2 - Signal Control: allows valve positioning using 4-20mA or 0-10 VDC control signal.	IN+ 200V 1A max OUT+ 30V 0.2A max protection	1	**IN +**: +4-20mA or 0-10VDC control signal
		2	**IN -**: -4-20mA or 0-10VDC control signal
		3	**OUT +**: +4-20mA position feedback signal
		4	**OUT -**: -4-20mA position feedback signal
J3 - Manual Control: Use external Switch or Relay to short the appropriate command signal to MC COM. For example, to OPEN the valve, short OPEN to MC COM. If OVERRIDE is shorted to MC COM, then OPEN/CLOSE buttons may be used to force valve into that position.	N/A - Override , Open, and Close should be tied to MC COM using dry contacts	1	**OVERRIDE**
		2	**OPEN**
		3	**CLOSE**
		4	**MC COM**
J4 - Status Relays: OPEN/CLOSED relays are Make on Event. They remain open until OPEN/CLOSED position is reached. ERROR status relay is Break on Event. It will remain closed until error.	Up to 350V 120mA max	1, 2	**ERROR**
		3, 4	**OPEN**
		5, 6	**CLOSED**
J5 - MODBUS	N/A	1	**A** - MODBUS Data (-)
		2	**B** - MODBUS Data (+)
		3	**MB COM** - Isolated common/ground for MODBUS
		4	**12 VDC** - Output to power MODBUS accessory if needed
PWR	60 VDC 15A max	1	**+48 VDC**
		2	**-48 VDC RETURN**
Ethernet - MODBUS TCP Communication		N/A	N/A
MOTOR	N/A Output only	1	Stepper S1A Connection
		2	Stepper S1B Connection
		3	Stepper S2A Connection
		4	Stepper S2B Connection
USB - Used to update controller firmware	N/A	N/A	N/A
SUPER CAP	N/A	1	SCBOOT - SuperCap Boot Status
		2	SCRST - SuperCap Reset
		3	SCTX - Data Transmitted to SuperCap
		4	SCRX - Data Received from SuperCap
		5	Ground

3.3 Basic User Menu Map

Starting from the MAIN screen, basic status and diagnostic information about the module may be obtained by using the Up/Down or Right/Left Arrow buttons as shown to the right.

The ESC button will return the unit to the home screen any time that a parameter is not being edited.

Main Screen

Information Screens

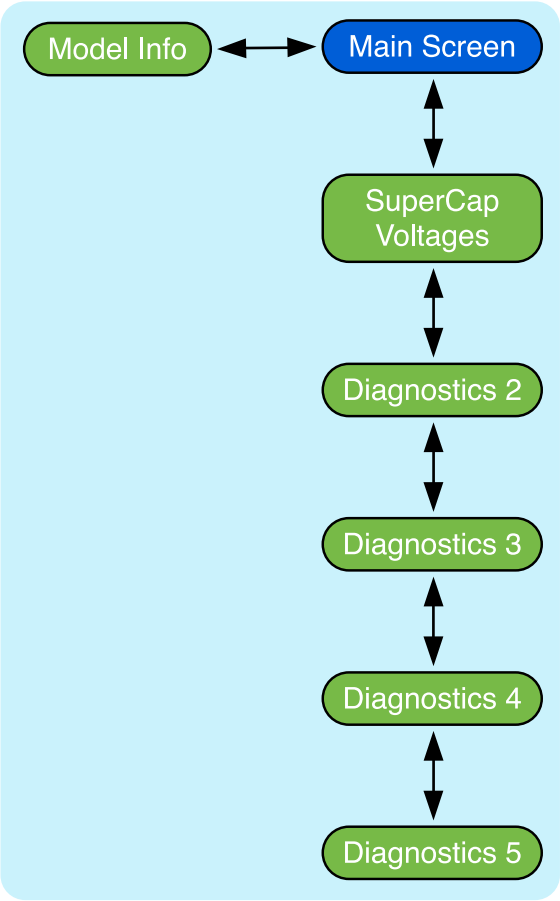

3.4 MAIN Screen Elements

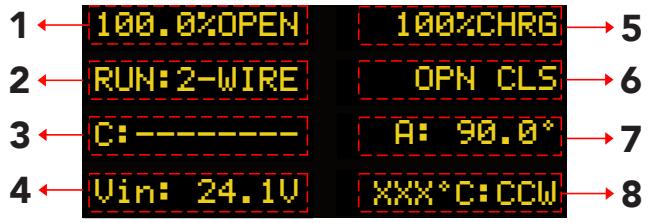

1) Percentage that valve has opened from closed position
2) Current RUN mode selected
3) Varies on actuator status/options selected:
   a) EPB Model and shaft not moving: Displays current cycle count of actuator
   b) EPB Model and shaft moving: Displays current desired shaft position
   c) Non-EPB Models: Displays current desired shaft position
   d) The entire line (elements 3 & 7) may also be used to display faults. For a list of faults and their explanation go to the Troubleshooting section.
4) Varies on actuator options selected:
   a) EPB Model: Displays Voltage Input detected on PSXXX-EPB module if the SuperCap firmware is version 3.0 or above.
   b) Non-EPB models: Displays currents cycle count of actuator.
5) Super Cap communication/charge status
6) Different RUN Mode status information is displayed here:
   a) If RUN mode is set to 4-20mA, the current mA signal value is displayed
   b) If RUN mode is set to One-Wire or On-Off, then the current J1 setting will be shown. If J1 is set up to have CLOSE as the command signal, J1:CLS will be displayed if not actively receiving a command signal. Once the command signal is detected status will be J1:+CLS+
7) Actual position of the valve
8) Displays current internal temperature of the actuator as well as the direction the valve will always turn to go to the OPEN position

Tip: For a simplified home screen layout press the UP arrow while on the home screen. Press UP again to go back to the standard view.

The simplified view shows items 1, 2, and 5 from above.

3.5 Super Cap Voltage Screen

```
C7: 2.45V  C8: 2.53V
C6: 2.32V  C5: 2.41V
C3: 2.56V  C4: 2.58V
C2: 2.34V  C1: 2.55V
```

Accessed by pressing ⬇ from the MAIN screen.

If Super Cap module is installed this screen shows individual charge levels for each capacitor. If Super Cap module is not installed, all levels will be shown as 0.

3.4 Diagnostics 2 Screen

```
DIAGNOSTICS    2/5↑↓
SC Stack 100% 19.56V
SC Charge   :   120s
SC Discharge:   520s
```

Accessed by pressing ⬇ from the Super Cap screen.

SC Stack: Total capacitor stack charge

SC Charge: Most recent amount of time to fully charge

SC Discharge: Most recent amount of time caps were discharged

3.5 Diagnostics 3 Screen

```
DIAGNOSTICS    3/5↑↓
Max: 96°F   SC:114°F
Mtr Starts:  --80000
MagDI: 0 0  MtrPwr:0
```

Accessed by pressing ⬇ from the Diagnostics 2 screen.

Max: Maximum temperature recorded in XCTRL.

SC: Maximum temperature recorded in SuperCap.

Mtr Starts: Displays number of times motor has been energized.

MagDI: Shaft magnet diagnostics - factory use

MtrPwr: 1 if motor is currently powered. 0 if it is not

3.6 Diagnostics 4 Screen

```
DIAGNOSTICS    4/5↑↓
ZC:     1   AR:158.5°
DT:518.5°   AT:518.5°
CO:536.3°   CC:446.3°
```

Accessed by pressing ⬇ from the Diagnostics 3 screen.

ZC: Times 0 point has been crossed (for multi-turn support)

AR: Raw magnet position

DT: Desired translated magnet position

AT: Actual translated magnet position

CO: Calibrated open position in degrees

CC: Calibrated closed position in degrees

3.7 Diagnostics 5 Screen

```
DIAGNOSTICS    5/5 ↑
#MS:      0 #CS:    0
     Last Stall
C:-------0 %0:   0.0
```

Accessed by pressing ⬇ from the Diagnostics 4 screen.

#MS: Motor Stalls

#CS: Cycle Stalls

C: Cycle number of last stall

3.8 Device Information Screen

```
 USI Technologies
SmartStep Actuator
    XCTRL-EPB
Version 4.2.2[3.0]
```

Accessed by pressing ⬅ from the MAIN screen.

Line 3: Lists whether it's an XCTRL or XCTRL-EPB

Line 4: Firmware version [SuperCap Firmware Version]

Note: All numeric data values are representative, actual values may vary

Section 4: Standard Operational Modes & Wiring

4.1 Manual Mode

To operate the SmartStep actuator in Manual mode, simply press the MAN button on while on the home screen. While in manual mode the actuator will move when pressing either the OPEN or CLOSE buttons on the keypad. Manual Override Control using dry contacts on the J3 port will also move the actuator in this mode.

4.2 Auto Mode: 1-Wire Control Signal

1-Wire mode is accessed by repeatedly pressing the AUTO button on the home screen until 1-WIRE is shown. Press ENT to select that mode.

1-Wire mode is wired using the J1 port on the XCTRL. A positive control wire is inserted into either OPEN or CLOSE and the common is inserted into one of the COM ports.

A wiring example for this mode is shown below. In this example, the actuator is being wired with a 24VDC power source and using as a switchable control signal inserted into the OPEN and COMM ports of J1. The control signal may be any of the supported voltages shown.

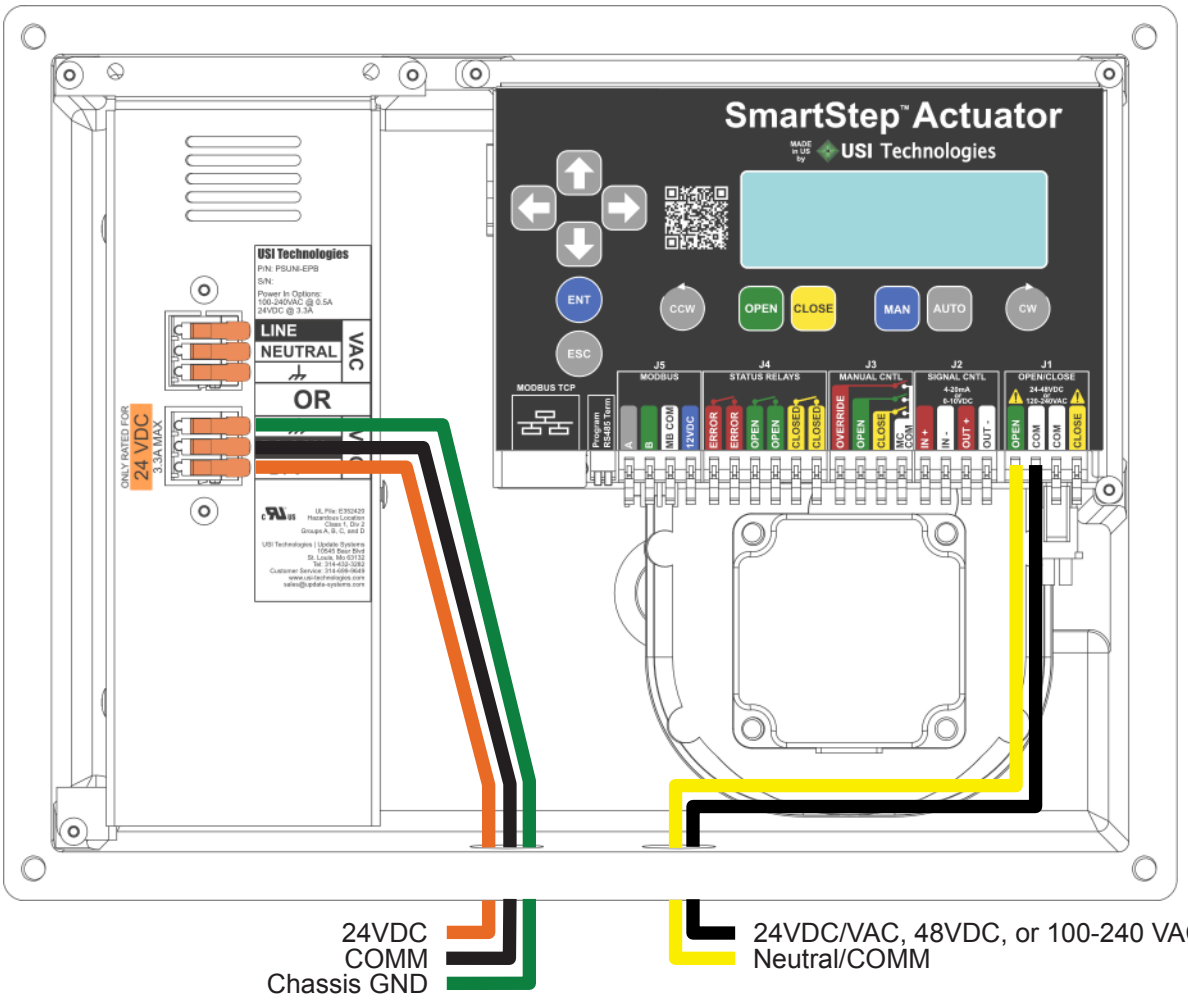

Open is the default port used for this control method however 1-Wire may be configured to accept either an OPEN or a CLOSE signal. If configured as shown in the above example, the actuator will move to the 100% OPEN position as long as it is receiving a signal. Once the signal is removed it will move to 0% OPEN.

*Note, this is only one example. Any signal in the voltage range may be used for J1. Depending on the Power Supply module, either 120VAC, 24VDC, or 24VAC may be used to power the actuator.

To change whether the actuator accepts an OPEN or CLOSE signal in this mode, Reference 1-WIRE SETUP screen **HERE**

4.3 Auto Mode: 2-Wire Control Signal

2-Wire mode is accessed by repeatedly pressing the AUTO button on the home screen until 2-WIRE is shown. Press ENT to select that mode.

2-Wire mode is wired using the J1 port on the XCTRL. Positive control wires are inserted into both the OPEN and CLOSE ports of J1. One or two common wires are inserted into the COM port(s) of J1.

A wiring example for this mode is shown below. In this example the actuator is being powered with a 120VAC power source and using a switchable control signal on the J1 port. The control signal may be any of the supported voltages

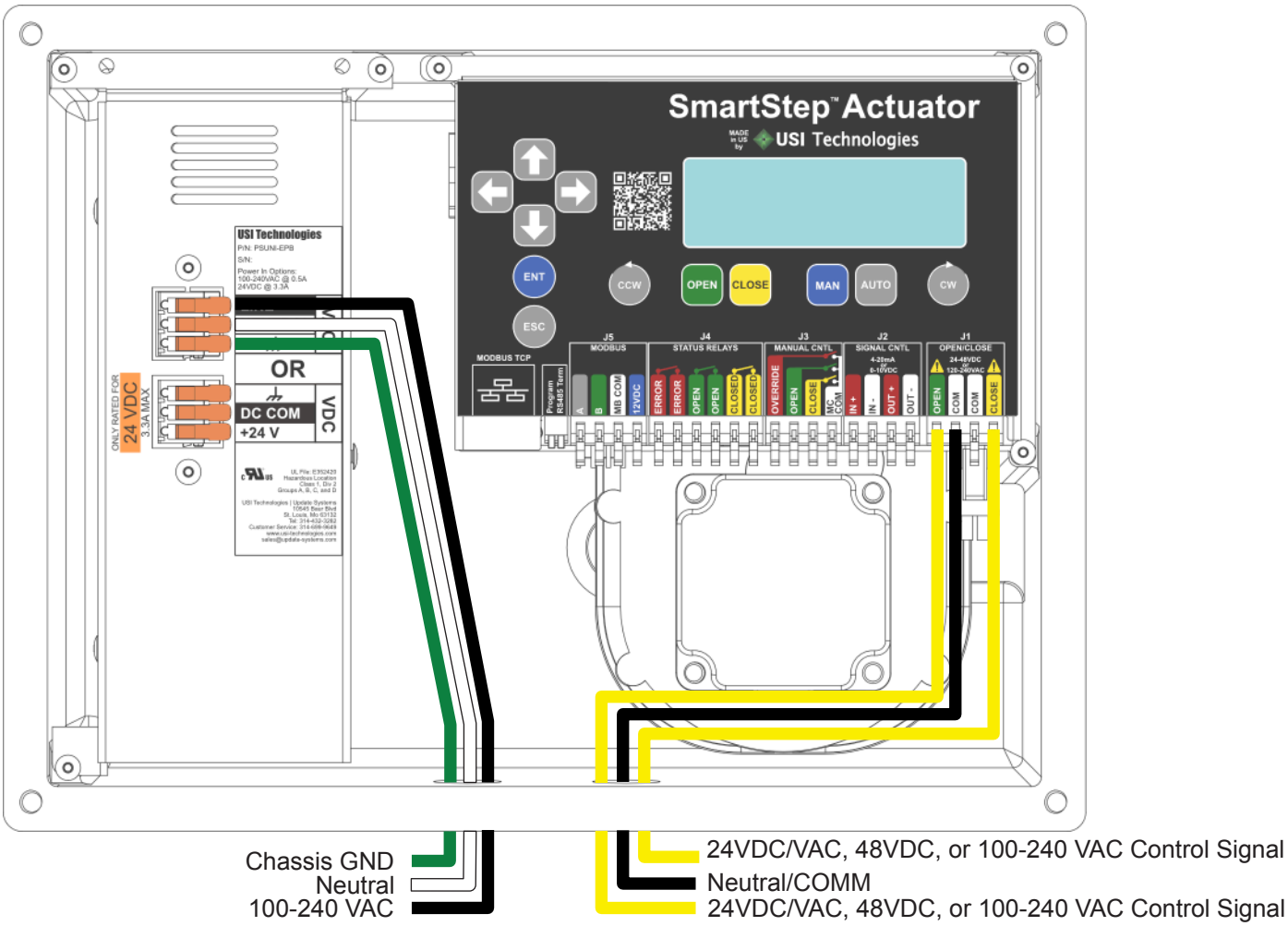

By default, in 2-Wire mode, while receiving either the OPEN or CLOSE command signal, the actuator will move towards that end point. If both signals are removed the actuator will STAYPUT. For further 2-Wire Configuration; click **HERE**

4.4 Auto Mode: 4-20mA Signal Control

4-20mA mode is accessed by repeatedly pressing the AUTO button on the home screen until 4-20mA is shown. Press ENT to select that mode.

4-20mA mode is wired using J2. Insert 4-20 mA or 0-10 V control signal into IN+ terminal. Insert COM wire into IN- terminal. Valve moves to X% OPEN based on calibrated control signal values

4-20mA powered loop feedback is also available by connecting an ammeter to the OUT+ and OUT- terminals. By default the feedback will output 4mA in the 0% OPEN position and 20mA in the 100% OPEN.

In 0-10V or 2-10V mode, the output may be configured to output the proper corresponding voltage as well, however to scale properly a 500 OHM resistor must be placed between the OUT- and OUT+ terminals.

The default wiring is shown below:

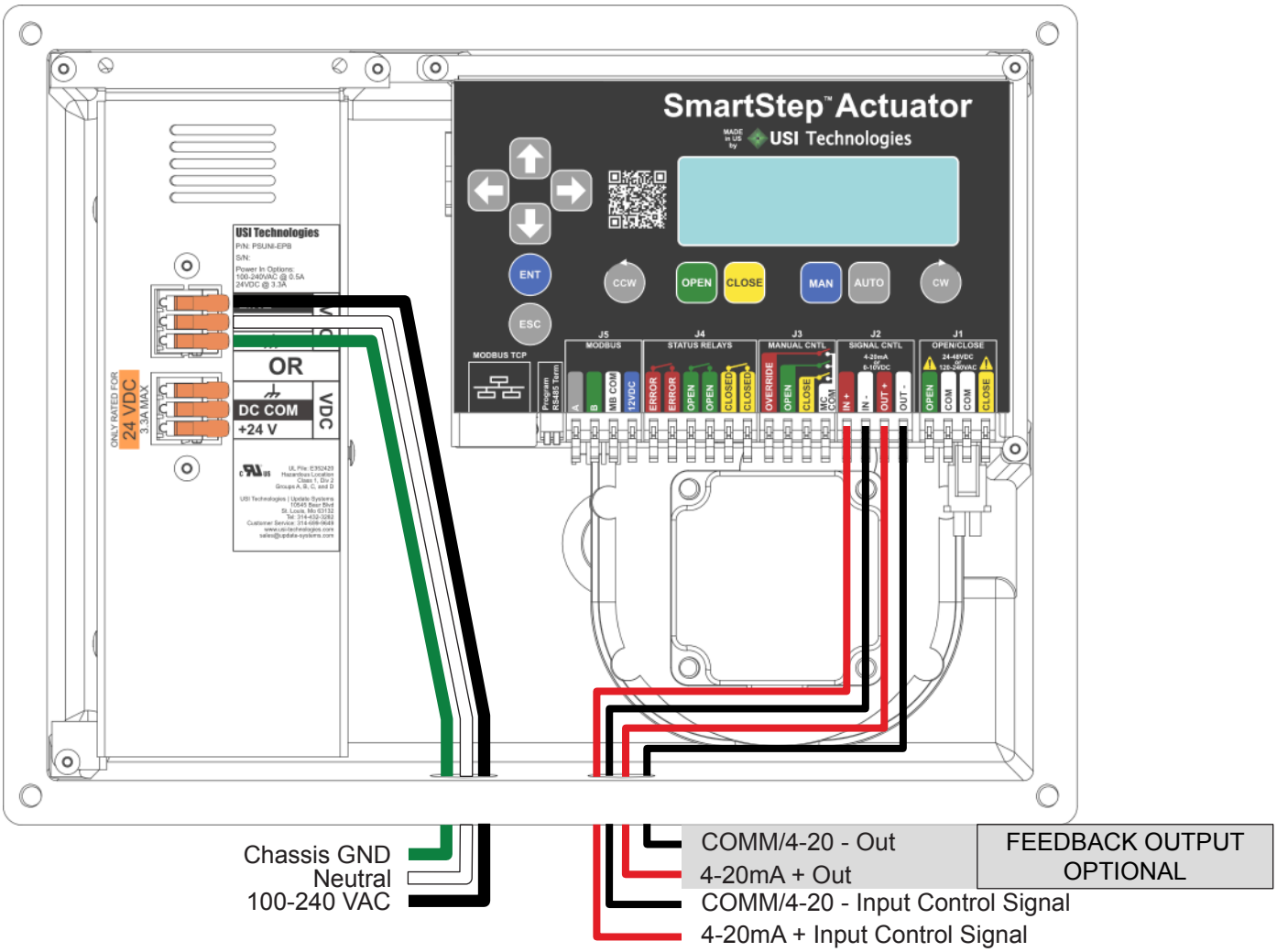

By default a SmartStep actuator is shipped with the 16mA range where 4mA is 0% OPEN and 20mA is 100% OPEN.

To see how calibrate the actuator to a different range or for advanced ADC/DAC calibration; click **HERE**

4.5 Auto Mode: MODBUS RTU

MODBUS RTU mode is accessed by repeatedly pressing the AUTO button on the home screen until MB-RTU is shown. Press ENT to select that mode.

Standard MODBUS operation. Default device ID is 1, BAUD is 38400, and timeout is 10s.

MODBUS RTU mode is wired using the J5 Port. Standard connection with Data - to A, Data+ to B, and Ground to GND.

The 12VDC option is an output on only there to supply accessory 12VDC power if needed.

Lever switch **RS485 Term:** if pressed down will apply a 120 Ohm load if needed (i.e. end of daisy chain)

Wiring example shown below.

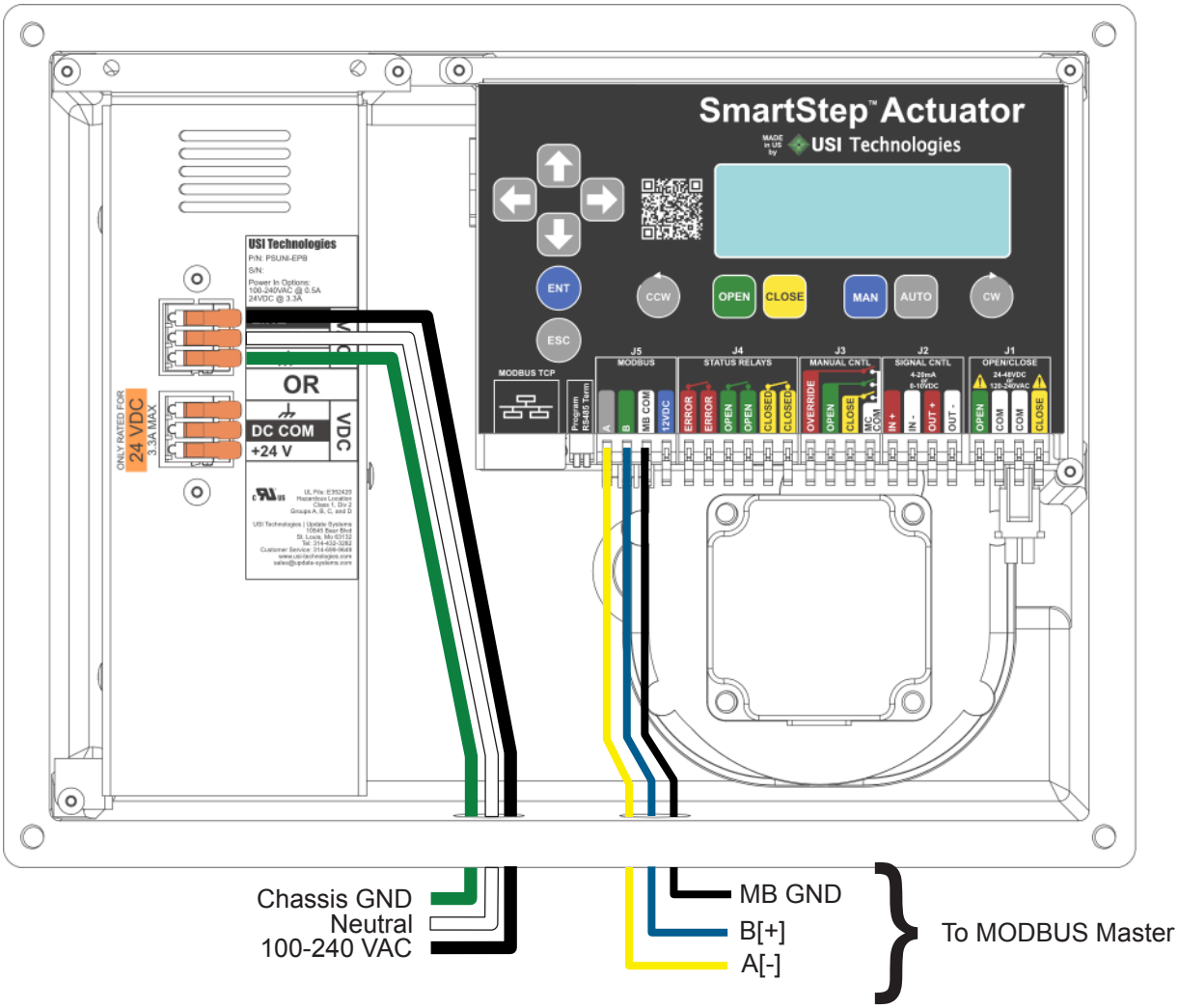

For further MODBUS RTU Setup; click **HERE**

4.7 Auto Mode: MODBUS TCP

MODBUS TCP mode is accessed by repeatedly pressing the AUTO button on the home screen until MB-TCP is shown. Press ENT to select that mode.

Standard MODBUS operation sent via TCP service. IP Address, Port, Gateway, and DHCP all need to be configured to match the site's existing network to properly function.

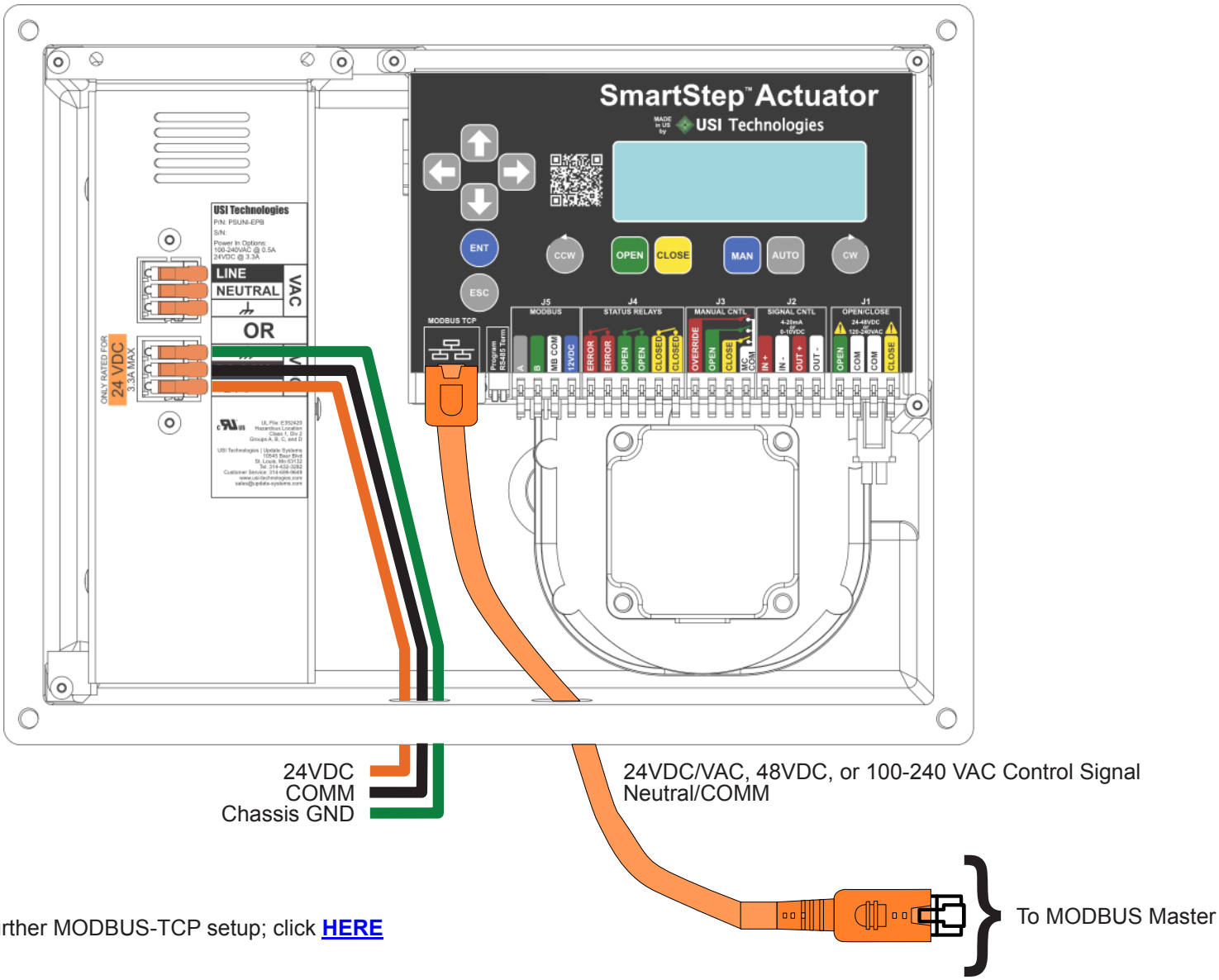

For further MODBUS-TCP setup; click **HERE**

4.8 Auto Mode: On-Off

NOTE: This option is only available if your SmartStep actuator has a SuperCap module installed. Reference the device label or the device information screen if unsure if the option is installed. If the option is installed, then the part number will end in -EPB. For example, X2500-PSUNI-EPB and X0400-PS024-EPB have SuperCap modules. X0400-PSUNI and X5000-PS024 do not have SuperCap modules.

On-Off mode is accessed by repeatedly pressing the AUTO button on the home screen until ON-OFF is shown. Press ENT to select that mode.

For ON-OFF, no extra wiring is needed to the unit other than the power input onto the module. This input needs to be switchable. By default in ON-OFF mode, the actuator will move to 100% OPEN when power is applied to the PS module. When power is turned off, the actuator will move to 0% OPEN.

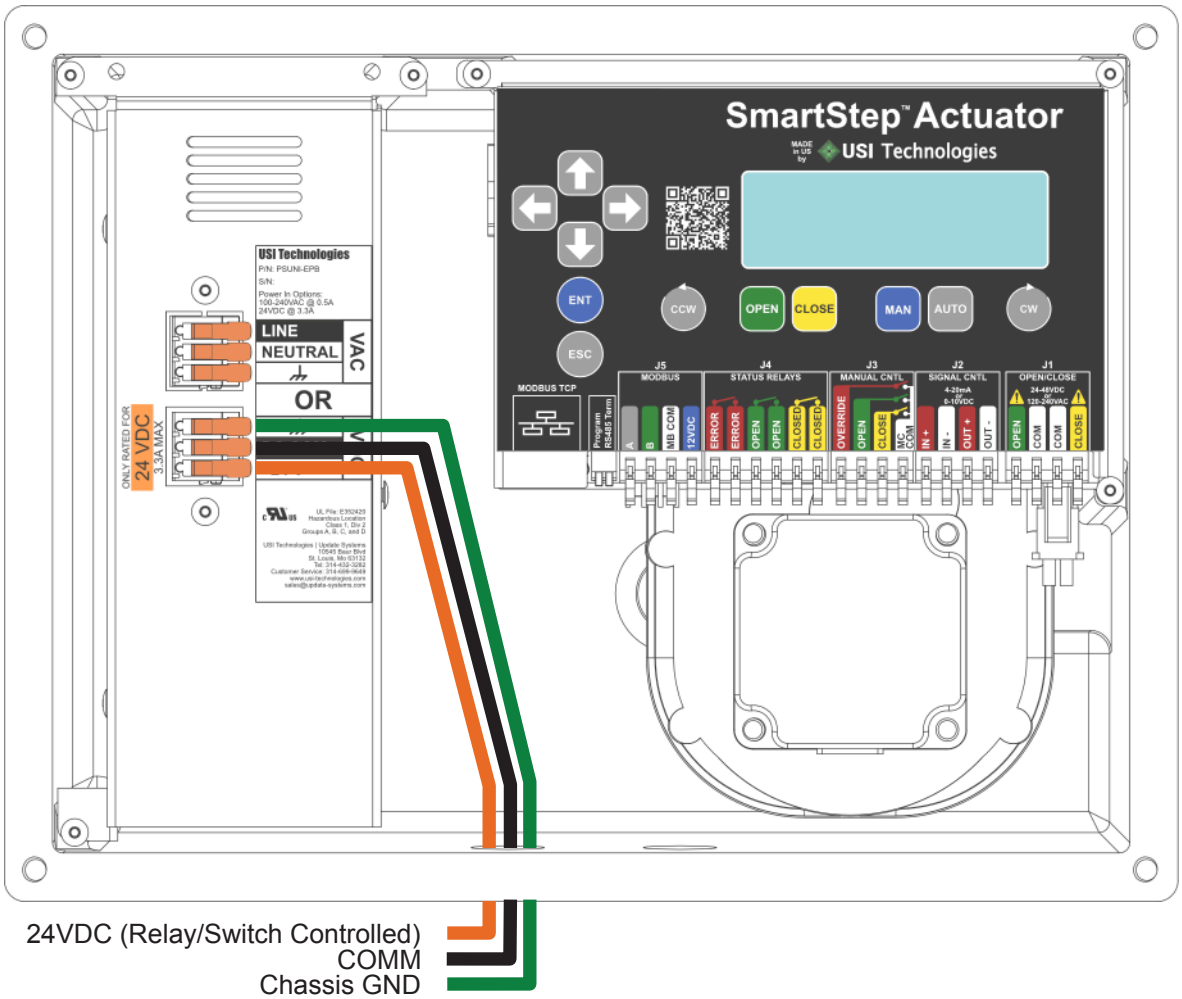

To configure the position the actuator moves to when power is received; click **HERE**

4.9 Override Mode

Manual Override is accomplished using the J3 Port using external relays or switches. The OVR terminal must be shorted to MC COM to enable the mode. Then CLOSE or OPEN need to be shorted to MC COM as well to override the actuators movement in the proper direction. Diagram below.

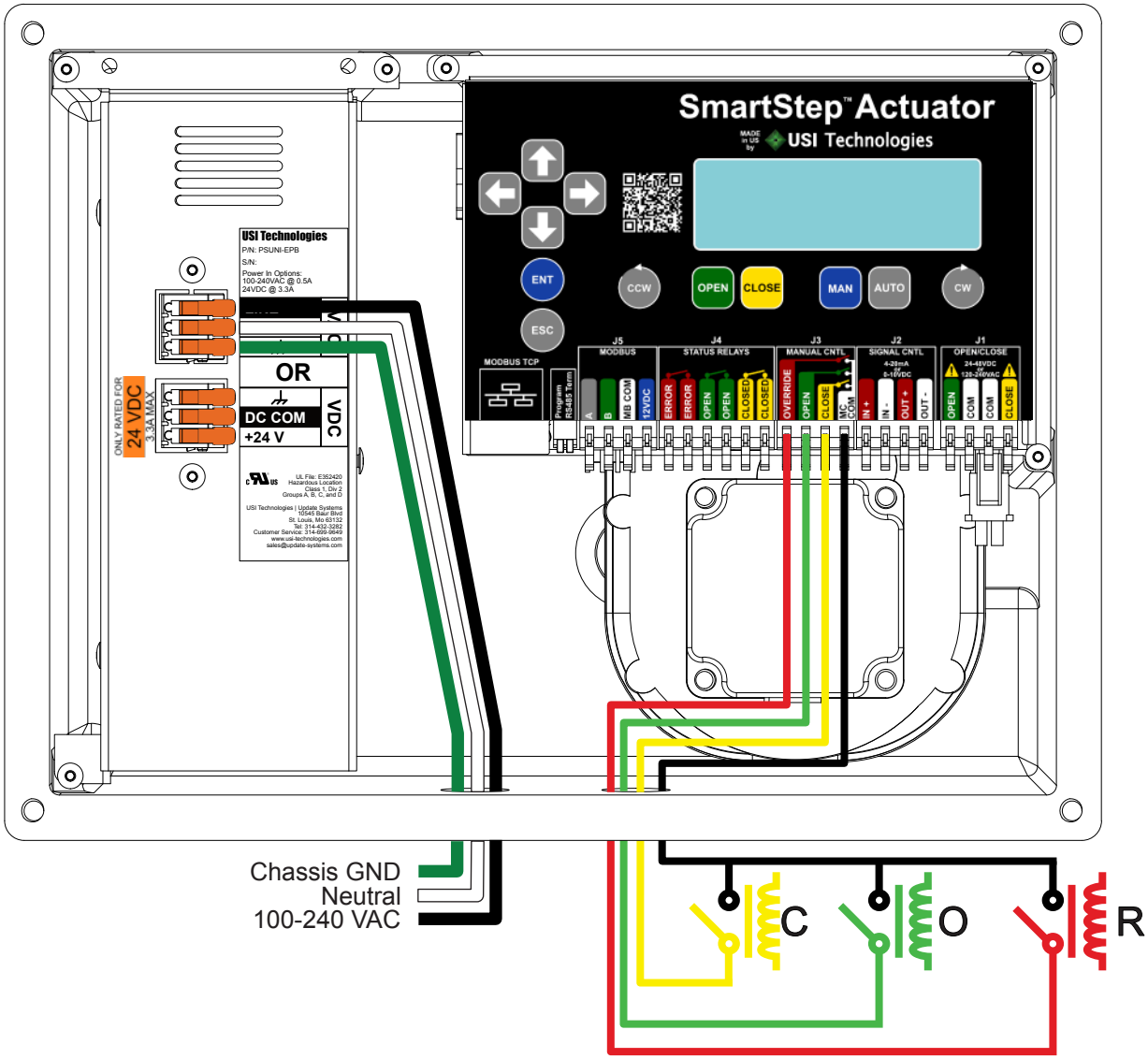

Manual Control Truth Table (X = relay contact make, "Blank" = contact break)			
R	O	C	Function
			Unit follows control mode it is in
X			Valve stops and stays put
X	X		Valve immediately OPENS
X		X	Valve immediately CLOSES
X	X	X	Valve stops and stays put

*Note: This mode can be used with ANY other control mode. For example, if using 4-20mA to modulate the valve's position but that modulation needs to be overridden for any reason, these inputs may be wired up during installation as well to override the 4-20mA modulation and force the valve into an OPEN or CLOSE state as needed.

4.10 Status Relay Wiring

The status relays are low current solid state relays used to connect inputs to PLC for position and fault notification. By default the relays make contact when the valve is at 0% OPEN, 100% OPEN, and if there is not currently and fault. When there is a fault, that relay will break contact. These are percentages are configurable though as well as whether they are set to MAKE or BREAK.

In the example below, the Status Relays will provide a 24VDC signal to inputs on a PLC

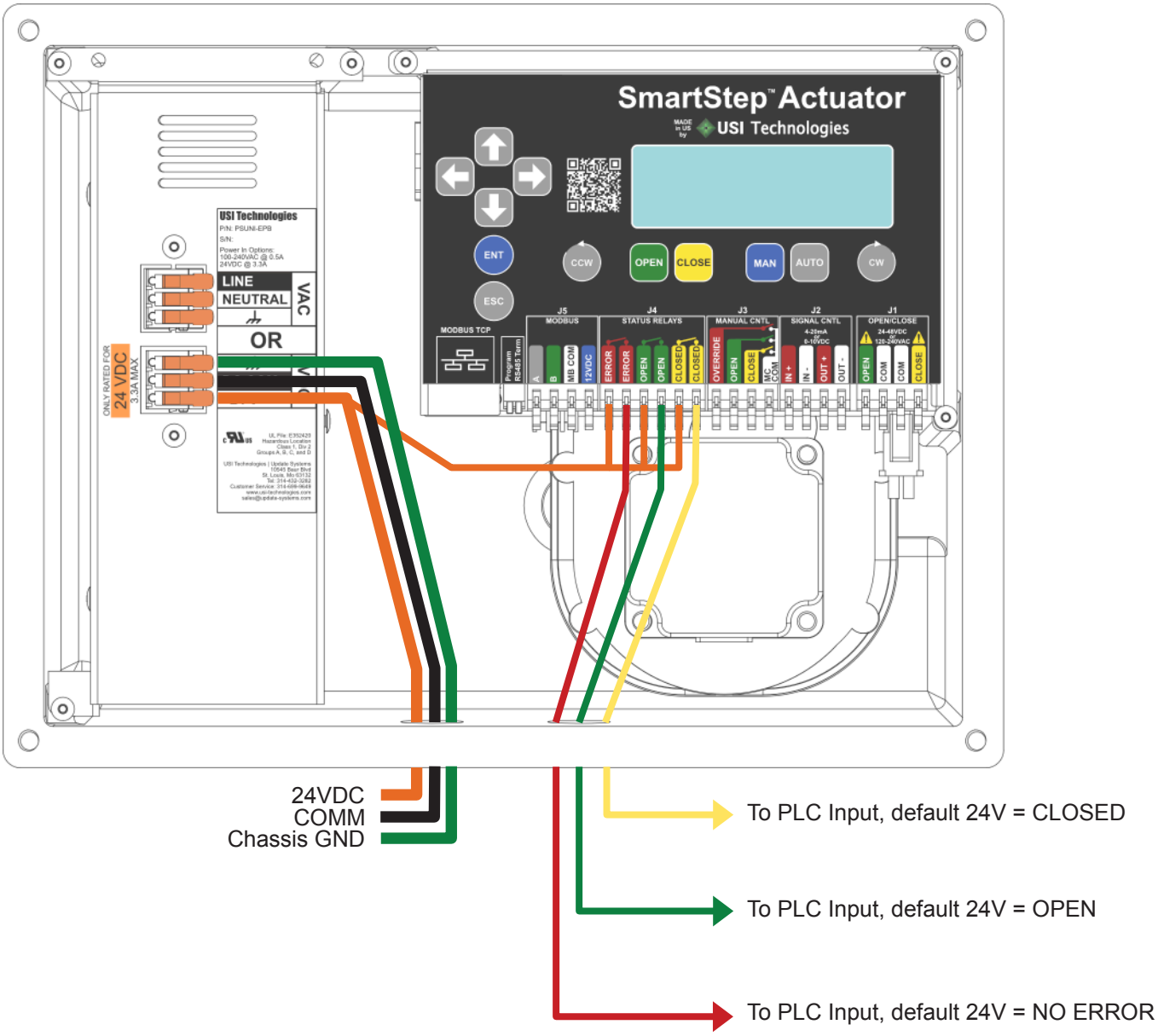

For further Status Relay Configuration, click **HERE.**

Section 5: Initial Setup / End Point Calibration

5.1 Initial Setup

Once the SmartStep actuator is properly mounted on the valve and has been verified to be wired properly, apply power.

Note: when mounting the actuator on to the valve, manually moving the valve to a known position, such as closed, will make end point calibration go that much quicker.

5.2 Basic End Point Calibration

1) Press ESC + → on the home screen. This will bring up the POSITION-SETUP screen as shown below. Note under the OPEN and CLSD both positions already show set due to default calibration during pre-shipment testing.

```
→PS→End Points 1/4 ↓
Calibration Finished
OPEN →   CCW    CLSD
Set.    90.0°   Set.
```

2) Set the direction the valve will move to the open direction. Press the proper rotation arrow button to set the open direction.

```
OPEN →   CW
OPEN →  CCW
```

3) Press CLOSE to clear the current setting of the CLOSED end point.

4) If the valve is already in the closed position, then all that needs to be done is to press ENT. Otherwise Press and hold CLOSE to move the actuator until the valve is close to the closed position. Then use short presses of the CLOSE button to gently seat the valve into place. Once the valve is seated properly, press the ENT button to store the CLOSED position.

5) Press OPEN to clear the current setting of the OPEN end point.

6) If setting and exact 90° span, press AUTO to automatically add 90° to the current closed position. Otherwise press and hold OPEN to move the actuator until the valve is properly seated. Once the valve is seated properly, press the ENT button to store the OPEN position.

Once both end points are set, actuator is able to OPEN/ CLOSE based on user input.

5.3 Automatic End Point Calibration

Note: This method can only be used with a valve that has hard stops at the end points. Those stops are what are used to sense the end points.

1) Press ESC + → on the home screen. This will bring up the POSITION-SETUP screen as shown in the previous section.

2) Set the direction the valve will move to get to the open position as explained in the previous section.

3) Press CLOSE to clear the current setting of the CLOSED end point.

4) Hold the AUTO button until a countdown appears in the upper portion of the screen. The actuator will automatically start moving in the closed direction until it senses the hard stop at the end of the travel.

5) Press OPEN to clear the current setting of the OPEN end point.

6) Hold the AUTO button until a countdown appears in the upper portion of the screen. The actuator will automatically start moving in the open direction until it senses the hard stop at the end of the travel.

All set!

5.4 Failsafe Setup

By default both Failsafe positions for a SmartStep actuator is the CLOSE position. If a different position is desired, then follow the below steps to change the setting.

1) From the PS→End Points screen, press ↓

2) Press ENT to enter edit mode. Use ↓ ↑ to cycle between the different Cntrl Loss options. The options are as follows:

a) CLOSE - Default option - actuator moves to the calibrated CLOSED end point

b) OPEN - actuator moves to the calibrated OPEN end point

c) PERCENT OPEN - actuator moves valve to X% open of the calibrated open position. For this option, after it is selected, the → needs to be pressed to move to the numeric entry line to change the value.

d) STAYPUT - The valve stays in the exact position it was in at the time of failure.

3) Press the → button to go to Power Loss options and choose appropriate Power Loss mode.

4) Press ENT to save the option once satisfied with your selection.

Section 6: Advanced Configuration Screen Map

6.1 Advanced Configuration Access

Just like performing the End Point Calibration, all advanced configuration on the actuator may be accessed from the menu when ESC + ➡ are pressed at the same time from the home screen. These screens should only be accessed by a trained technician. Damage may occur to the actuator or other equipment if improperly set up.

***Note: Where applicable the mock screens in the following sections are all shown with the DEFAULT values in the controller when the actuator is shipped from the factory unless a different option is requested upon order such as Power Mode. If a setting is changed and you aren't sure what it was; refer to the mock screens*

6.2 Menu Navigation Button Reference

Buttons	
⬆⬇	Move up and down the menus | Change value on parameter screens
⬅ in menu	Back out of Sub-Menu into Main Menu
⬅ on parameter screen	Go to previous value to edit
➡ in menu	Enter Sub-Menu from Main Menu
➡ on parameter screen	Move to next value on parameter screen
ENT	Select Menu item | Store Values/Confirm
ESC	Cancel Entry/Back out of Menu
Button Combinations	
ESC + ➡	From Main Screen, enter Calibration Mode

Examples:

Position Setup is highlighted

```
Menu            1/3↑↓
1→Position Setup[PS]
2 4-20mA Setup  [MA]
3 Power Manage  [PM]
```

ENT Or ➡ pressed

Position Setup sub-menu entered

```
→PositionSetup 1/2↑↓
1→End Points
2 Failsafe
3 Speed
```

On End Point Setup Screen

```
→PS→End Points 1/4 ↓
Calibration Finished
OPEN →  CCW    CLSD
Set.   90.0°   Set.
```

ESC Or ⬅ pressed

Position Setup main menu entered

```
→PositionSetup 1/2↑↓
1→End Points
2 Failsafe
3 Speed
```

6.3 Menu Map

Main Menu	Sub-Menu	Description
→PS→End Points will always be the first screen seen when pressing ENT +		
1. Position Setup [PS]	**1. End Points**	Set **Open & Close End Points** as well as Open Direction
	2. Failsafe	Set POWER & SIGNAL Loss **Failsafe Positions**
	3. Speed	Set **MIN/MAX Speed** and Acceleration Span
	4. Misc	Open Direction, Band Gap, Multi-Turn Speed Boost
2. 4-20 Setup [MA]	1. Cal Control Input	Calibrate Open/Close Modulated Signal Position (4-20mA/0-10VDC)
	2. Cal Output DAC	Calibrate Feedback DAC Levels
	3. Cal Input ADC	Calibrate Input ADC Levels
	4. J2 Signal Format	Set 4-20mA, 0-10VDC, or 2-10VDC Format
3. Power Manage [PM]	1. Motor	Power Mode (Temp Control/Power Save/HoldingTorque)
	2. Controls	Control power to circuits based on control mode
	3. SuperCap	Charge Rate
4. OPN/CLS Setup [OC]	1. 1-Wire	J1 Port used (OPN or CLS)
	2. 2-Wire	J1 Signal Mode (Continuous vs One-Shot)
	3. ON/OFF	Actuator action when power is applied
	4. Timer Override	Use timer to override J1 Signal
	5. Input Delay	Delay actuator action after signal applied
5. MODBUS Setup [MB]	1. RTU Serial	Device ID, Baud Rate, Timeout settings
	2. TCP IP	IP Address, Gateway, Subnet settings
	3. TCP MISC	Port Number & DHCP
6. Status Relays [SR]	1. Error	Mode, Trip Delay, Trip on EPB Service
	2. Open	Mode, Trip Level, Trip Delay
	3. Closed	Mode, Trip Level, Trip Delay
7. Misc Setup [MS]	1. EMI Noise Filters	Digital Input Level, Keypad Level, Keypad Lock
	2. Units	Temperature Units
	3. Security	Menu Lockout
8. WiFi Setup [WF]	Future Development	
9. Factory Setup [FS]	1. Restore Defaults	Restore System or Clear Calibration Points
	2. Keypad Test	Test all keypad buttons
	3. 4-20 Loopback Test	Test 4-20 Input/Output functionality
	4. MAC Address/Lot Number	Internal MAC Address & Lot number

Section 7: Position Setup [PS] Tree

Refer to **Section 6** on the steps needed to take to access this configuration tree

7.1 Position Setup Screen

As shown in section 5.2, this screen is used to calibrate the end points of the SmartStep Actuator. If calibration has been completed then the screen should appear similar to below:

```
→PS→End Points 1/4 ↓
Calibration Finished
OPEN →  CCW    CLSD
Set.   90.0°   Set.
```

The 90.0° in shown in this example shows that the range set between the two end points is 90.0°. Depending on the range of your setup, that number will vary. However both to the left and right of that middle range the words “Set.” confirm that those end points have been set along with the “Calibration Finished”

If the unit has had the calibration cleared from the Restore Defaults Screen, then the screen will appear as below and a calibration will have to be done in order for the unit to function. Calibration instructions are shown in Section 5.2

```
→PS→End Points 1/4 ↓
Needs Calibration
OPEN →  CCW    CLSD
   0.0°
```

7.2 Failsafe Setup Screen

As shown in section 5.3, this screen is used to set the Failsafe mode of the actuator during power or signal loss.

```
→PS→Failsafe   2/4↑↓
Cntrl Loss:    CLOSE
Power Loss:    CLOSE
```

Press the ENT button to enter edit mode. Use UP/DOWN Arrows to change value. If using Percent Open, use LEFT/RIGHT Arrows when selected to move to the next field. Press ENT again to set FAILSAFE mode when proper selection is made.

- **CLOSE -** Valve moves to closed position
- **OPEN -** Valve moves to open position
- **PERCENT OPEN** - Valve moves to percent open
- **STAYPUT** - Valve stays where it is

7.3 Speed Setup Screen

By default the SmartStep Actuator is set to 70% speed. Use this screen to change the speed if a faster or slower speed is needed. The Acc/Decel span is the number of degrees the actuator will slow or speed up before achieving the set speed or coming to a stop.

```
→PS→Speed      3/4↑↓
Max Speed OPN : 70%
Max Speed CLS : 70%
Acc/Decel Span: 5°
```

1) Press ENT to enable editing

2) The Max Speed OPN value will start blinking. Use the ↑ and ↓ buttons to adjust the value in increments of 10% until desired speed is achieved.

3) Press → to edit the Max Speed CLS value. Use the ↑ and ↓ to adjust the value.

4) Press → to edit the Acc/Decel Span value. Use the ↑ and ↓ to adjust the value.

5) Press ENT to store the values.

7.4 Misc Screen

The Range Control screen is the last screen in the Position Setup tree. This screen may be used to set the Open direction to Clockwise (CW) or Counter-Clockwise (CCW) as you’re able to do using the shortcut buttons on the Position Setup Screen.

```
→PS→Misc       2/4 ↑
Open Direction:  CCW
Band Gap [+/-]: 0.2°
Boost MT Speed:  OFF
```

This screen also allows for editing of the Band Gap or Hysteresis of the drive circuit. By default if the signal changes the position by more than 0.2° the shaft will move. That may be changed if less accuracy is needed, in high vibration environments, or if a control signal is exceptionally noisy.

If Boost MT Speed is enabled, then if the range is greater than 360°, the speed will be boosted by 20% to improve Multi-Turn open/close time.

Press the ENT button to enter edit mode. Use UP/DOWN arrows to change the value on the line that is blinking. Use the LEFT/RIGHT arrows to move to the next line and repeat the first direction. Press ENT again to set the values.

Section 8: 4-20mA [MA] Setup Tree

Refer to **Section 6** on the steps needed to take to access this configuration tree

8.1 4-20mA Control Calibration Screen

This screen allows you to calibrate the mA values that determine the %OPEN that the actuator will move the valve. Be default it is a 16mA range with 4mA being the CLOSED position and 20mA being the 100% OPEN position.

To simply swap the values so that 4mA is OPEN and 20mA is closed; Press OPEN + CLOSE at the same time.

Default values are as shown below:

```
→MA→CTRL Input 1/4 ↓
 Cal Completed
0:mA  |  0.00|  C:mA
20.00 | 16.00|  4.00
```

To set new OPEN/CLOSE calibration values, an external control signal is necessary. Connect the signal wires into the ports as shown:

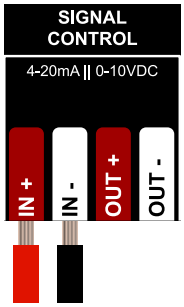

Calibration:

To change OPEN/CLOSE signal values:

1) Apply control signal to IN + and IN - on J2.

2) Press ↑ + OPEN or ↑ + CLOSE to clear the set point that needs to be updated.

3) Verify the signal on the third line of the screen matches the signal being applied.

```
0:mA  |  0.00|  C:mA
```

4) Press OPEN or CLOSE to store the value in that end point.

8.2 Output DAC Calibration Screen

The DAC Calibration screen is to calibrate the Analog Output from the controller (J2 OUT+ and OUT-).

```
→MA→Output DAC 2/4↑↓
DAC Value  4mA: 646
DAC Value 20mA: 3207
DAC 4-20 Span = 2561
```

Note: these values are representative, actual values may vary.

By default the DAC output will output 4mA when in the CLOSED position and 20.10mA when in the OPEN position.

Calibration:

1) Press ENT to enable the screen

2) Hook up meter to read the current output to J2 OUT+ and OUT-

3) Press ENT to start calibration. The 4mA value will start blinking. Use the ↑ and ↓ buttons to adjust the value to give the desired output.

4) Press → to edit the 20mA value. Again use the ↑ and ↓ to adjust the value. When satisfied with the output of both press ENT to store them.

8.3 4-20mA ADC Calibration Screen

The ADC Calibration screen is to calibrate the Analog Input to the controller (J2 IN+ and IN-). These settings are set at factory using a calibrated 4-20mA loop generator. Be advised changing these values may cause the unit to not properly function.

```
→MA→Input ADC  3/4↑↓
ADC  4.00mA Val:732
ADC 20.00mA Val:3657
Act=20.00mA Rng=2925
```

Note: these are representative values, actual values may vary.

1) Press ENT to enable the screen

2) Hook up 4-20mA signal generator to feed the input to J2 IN+ and IN-

3) Press ENT to start calibration. The 4mA value will start blinking. Apply 4mA signal and use the ↑ and ↓ buttons to adjust the **Act** value until it matches the value of the signal generator.

4) Press → to edit the 20mA value. Again use the ↑ and ↓ to adjust the value after applying the 20mA signal. When satisfied with the output of both press ENT to store them.

Screen 4/4 on the next page

8.4 J2 Format Screen

Both SmartStep controllers are capable of accepting 4-20mA, 2-10VDC, and 0-10VDC modulated control inputs. The feedback also supports all modes.

The Output may be flipped if desired as well. This would mean that if a 20mA signal is supplied, instead of 20mA being output, 4mA would be output. 4mA input would give 20mA feedback

*Note: In the 0-10VDC input, the lowest that can be recognized by either controller is roughly 0.5VDC due to the protection diode voltage drop on the front end of the circuit

If using VDC feedback, a 500 Ohm resistor load must be placed across the output terminals to properly scale the voltage.

```
→MA→J2 Format  4/4 ↑
Input  Type:  4-20mA
Output Type:  4-20mA
Output Flip:     OFF
```

1) Press ENT to enable editing

2) The Input Type value will start blinking. Use the ↑ and ↓ buttons to choose the proper input format.

3) Press → to edit the Output Type value. Use the ↑ and ↓ to choose the proper output format.

4) Press → to edit tOutput Flip value. Use the ↑ and ↓ to turn it on or off.

5) Press ENT to store the values.

Section 9: Power Management Tree

Refer to **Section 6** on the steps needed to take to access this configuration tree

9.1 Motor Screen

Power management controls the conditions that the actuator will keep motor torque enabled. If current draw is an issue, this is one setting that will help lower the standby power of the actuator.

```
→PM→Motor        1/3 ↓
  TEMP CONTROL MODE
** Holding Torque **
* High Ambient OFF *
```

Press the ENT button to enter edit mode. Use ⬆/ ⬇Arrows to change the field's value. Press ENT again to save settings.

- **POWER SAVE MODE -** After moving to set position, motor holding torque will be turned off. Helps lower power usage in solar applications and other low power environments
- **TEMP CONTROL MODE -** Motor holding torque will be turned off in high ambient temperature environments. Helps to keep temperature down to protect electronics and lower condensation in high temperature environments.
- **HOLDING TORQUE MODE** - Motor holding torque will always be enabled regardless of environment.

9.2 Controls Screen

*Only Available on SCTRL Model

Allows for lower power draw to be lowered if conditions required it.

```
→PM→Control      2/3↑↓
```

9.3 Controls Screen

This screen allows the user to change the charge rate of the SuperCap Module By default MAXIMUM is selected. If power draw is a worry, a reduced charge rate may be selected. This will mean that the SuperCap will charge more slowly.

```
→PM→Supercap     1/3 ↓
Charge Rate: MAXIMUM
```

Press the ENT button to enter edit mode. Use ⬆/ ⬇Arrows to change the field's value. Press ENT again to save settings.

- **MAXIMUM -** SuperCap will charge at full speed until reaching 90% at which point it will go into reduced charge to finish filling the stack.
- **REDUCED -** SuperCap will charge at the reduced charge rate the entire time.

Section 10: MODBUS Setup Tree

Refer to **Section 6** on the steps needed to take to access this configuration tree

*Note: Even if not using MODBUS to control the actuator, status information is available via the MODBUS ports with proper setup.

Protocol Defaults:

Parity - None
Stop Bits - 1
Data Bits - 8

10.1 MODBUS RTU Setup Screen

This mode requires inputs in the J5 terminal block for MODBUS A(-), MODBUS B(+), MB COM (Signal Ground). The 12VDC port is an output for any accessories that need it, but is not necessary for actuator operation. Default values are as shown below:

```
→MB→RTU Serial 1/3 ↓
Device ID  :  1
Baudrate   :  38400
COM Timeout:  10s
```

Press the ENT button to enter edit mode. Use ←/→ Arrows to move between the editable fields. Use ↑/↓ Arrows to change each field's value. Press ENT again to save settings.

- **Device ID -** Number from 1-255
- **Baud rate -** Standard values of 4800, 9600, 19200, 38400, 57600, or 115200
- **COM Timeout** - Amount of time before MODBUS Slave Receive Timeout Trips. Select value of 1-20 seconds or disable by selecting NONE

10.2 MODBUS TCP Screen

Standard MODBUS operation sent via TCP service.

```
→MB→TCP IP      2/3↑↓
sIP: 192.168.10 .60
sGW: 192.168.10 .1
sSM: 0  .0  .0  .0
```

Press the ENT button to enter edit mode. Use ←/→ Arrows to move between the editable fields. Use ↑/↓ Arrows to change each field's value. Press ENT again to save settings.

- **sIP -** Static IP Address for the controller.
- **sGW -** Static Gateway Address for the controller.
- **sSM** - Subnet Mask for the controller.

10.3 MODBUS Opt Setup Screen

```
→MB→TCP Misc    3/3↑
Port: 0502
DHCP: OFF
```

Press the ENT button to enter edit mode. Use ←/→ Arrows to move between the editable fields. Use ↑/↓ Arrows to change each field's value. Press ENT again to save settings.

- **Port -** Default port controller uses to access network
- **DHCP -** Allow the actuator to automatically grab IP address if enabled. Otherwise it will only use the static one provided.

10.4 MODBUS Register Map

Table Name	Coil/Register Numbers	Data Addresses	Type
Discrete Output Coils	1-9999	0000-270E	Read/Write
Discrete Input Coils	10001-19999	0000-270E	Read Only
Analog Input Registers	30001-39999	0000-270E	Read Only
Analog Output Holding Registers	40001-49999	0000-270E	Read/Write

Coil/ Register	Address	Size	Mode (R/W)	Data Type	Description
1	0	1	R/W	bool	OPEN/CLOSE Forced Coil output (1= “OPEN” 0 = “CLOSE”)
10001	0	1	R	bool	[Valve Fully Open] AUX1 Output Status (1 = "on", 0 = "off")
10002	1	1	R	bool	[Valve Fully Closed] AUX2 Output Status (1 = "on", 0 = "off")
10003	2	1	R	bool	Error Relay Output Status (1 = "on", 0 = "off")
10004	3	1	R	bool	FAULT: Position Calibration Needed (1 = "on", 0 = "off")
10005	4	1	R	bool	FAULT: Input 4-20mA Invalid (1 = "on", 0 = "off")
10006	5	1	R	bool	FAULT: Position Sensor (1 = "on", 0 = "off")
10007	Reserved				
10008	7	1	R	bool	FAULT: Open/Close Inputs Invalid (1 = "on", 0 = "off")
10009	8	1	R	bool	FAULT: Open/Close Interface Disconnected (1 = "on", 0 = "off")
10010	9	1	R	bool	FAULT: Motor Is Stalled (1 = “on”, 0 = “off”)
10011	10	1	R	bool	Advisory: Service EPB Module
10012-10016	11-15	5	R	bool	Reserved (0xFF)
10017	16	1	R	bool	Indicates if user is in menu or not. (1 = in menu, 0 = not in menu)
10018	17	1	R	bool	Indicates temperature units (1 = C, 0 = F)
10019	18	1	R	bool	Manual Override engaged (1 = “on”, 0 = “off”)
10020	19	1	R	bool	Supercap Backup Power COM Lost (1 = “on”, 0 = “off”)
10021	20	1	R	bool	Supercap Backup Power ON (1 = “on”, 0 = “off”)
10022	21	1	R	bool	Main Power Lost (1 = “on”, 0 = “off”)
30001	0	1	R	ushort	Current Valve Percent Open (least significant digit is tenth's place. (i.e. 237 = 23.7% open)
30002	1	1	R	ushort	Current Temperature (oC or oF based on config)(Default: oF) (e.g. 80 = 80 oF)
30003	2	1	R	ushort	Maximum Temperature (oC or oF based on config)(Default: oF) (e.g. 100 = 100oF)
30004-30005	3-4	2	R	uint	Number of Cycles (30004 == BITS[31…16], 30005 == BITS[15…0])
30010	9	1	R	uint	Last Supercap charge time (in seconds)
30011	10	1	R	uint	Last Supercap discharge time (in seconds)
30012	11	1	R	uint	Number of motor starts
30013	12	1	R	uint	Voltage in to Supercap (##.#V)
30014	13	1	R	uint	Current Operational Mode (0=Manual, 1=4-20mA, 2=2Wire, 3=1Wire, 4=ON/OFF (EPB only), 5=MB-RTU, 6=MB-TCP)
30015-30016	Reserved				
30017	16	1	R	uint	Number of Motor Stalls bits[31-16]
30018	17	1	R	uint	Number of Motor Stalls bits[15-0]
30019	18	1	R	uint	Number of Cycle Stalls bits[31-16]
30020	19	1	R	uint	Number of Cycle Stalls bits[15-0]
30021	20	1	R	uint	Cycle Count of Last Stall bits[31-16]
30022	21	1	R	uint	Cycle Count of Last Stall bits[15-0]
30023	22	1	R	uint	Percent Open of Last Stall [0-1000] = 0 – 100.0%
40001	0	1	R/W	ushort	Desired Open Position (Tenth Percent as 0 to 1000) (i.e. 496 = 49.6% open)
40002	1	1	R/W	ushort	Max Open Speed (%/10 of Max Valve Speed) (1 - 10) (Default: 7 or 70%)
40003	2	1	R/W	ushort	Max Close Speed (%/10 of Max Valve Speed) (1 - 10) (Default: 7 or 70%)
40004	3	1	R/W	ushort	Acc/Decel Span (Degree Range for Acceleration and Deceleration) (10- 100) (Default: 5)
40005	4	1	R/W	ushort	Change main screen skin. 0 for detailed, 1 for simple layout (0 - 1) (Default: 0)

Section 11: Status Relay Setup Tree

Refer to **Section 6** on the steps needed to take to access this configuration tree

The Status Relays are made to make low-current connections to light towers or equivalent status indicators. They are rated for a maximum of 120-240VAC or 5-48VDC @ 120mA.

By default Open/Close relays are make on event. They stay open until the Open or Closed set point is reached.

By default the Error status relay is a break on event indicator. It stays closed until there is an error. Errors may be viewed on screen or via MODBUS.

11.1 Error Status Relay Setup Screen

```
→SR→Error        1/3 ↓
Mode: Break on Event
Trip Delay: 1s
Trip on Srvc EPB:OFF
```

Press the ENT button to enter edit mode. Use ←/→ Arrows to move between the editable fields. Use ↑/↓ Arrows to change each field's value. Press ENT again to save settings.

- **Mode -** Set to either Make or Break on Event.
- **Trip Delay -** Range from 0 to 30 seconds.
- **Trip on Srvc EPB** - On/Off to send fault if EPB charge capacity has reached 50% of the original capacity.

11.2 Open Status Relay Setup Screen

```
→SR→Open         2/3↑↓
Mode: Make  on Event
Trip: 100% OPEN
Trip Delay: 0s
```

Press the ENT button to enter edit mode. Use ←/→ Arrows to move between the editable fields. Use ↑/↓ Arrows to change each field's value. Press ENT again to save settings.

- **Mode -** Set to either Make or Break on Event.
- **Trip -** Percent open that causes relay to trip. Value range from 0 to 100%.
- **Trip Delay** - Range from 0 to 30 seconds.

11.3 Close Status Relay Setup Screen

```
→SR→Closed       2/3 ↑
Mode: Make  on Event
Trip: 0% OPEN
Trip Delay: 0s
```

Press the ENT button to enter edit mode. Use ←/→ Arrows to move between the editable fields. Use ↑/↓ Arrows to change each field's value. Press ENT again to save settings.

- **Mode -** Set to either Make or Break on Event.
- **Trip -** Percent open that causes relay to trip. Value range from 0 to 100%.
- **Trip Delay** - Range from 0 to 30 seconds.

Section 12: Misc Setup Tree

Refer to **Section 6** on the steps needed to take to access this configuration tree

12.1 EMI Noise Filters Screen

```
→MS→EMI Filter 1/3 ↓
DI Level:        MED
Keypad Level:    LOW
Keypad Lock:      ON
```

Press the ENT button to enter edit mode. Use ⬆/ ⬇Arrows to change the field's value. Press ENT again to save settings.

- **DI Level -** Sets the level that the firmware will filter Digital Inputs. Low: 100mS, Med: 300mS, High: 500mS
- **Keypad Level -** Sets the level that the firmware will filter Keypad Presses. Low: 100mS, Med: 300mS, High: 500mS.
- **Keypad Lock** - If enabled, then when the actuator is idle and on the Main Screen for 5 minutes, the keypad will lock itself. This is to help prevent unwanted button presses in environments with high amounts of electrical noise. Can also be enabled by pressing the button from ENT the Main Screen. To access the unit once it's enabled, a button will need to be pressed for 3 seconds.

12.2 Units Screen

The units that the actuator will display temperature in. Options are Fahrenheit (°F) or Celsius (°C)

```
→MS→Units       2/3↑↓
Temperature:  °F
```

Press the ENT button to enter edit mode. Use ⬆/ ⬇Arrows to change the field's value. Press ENT again to save settings.

12.3 Security Screen

If enabled, once the menu has been exited, a password will have to be entered to access the menu.

```
→MS→Security    3/3 ↑
Menu Security:    OFF
```

Press the ENT button to enter edit mode. Use ⬆/ ⬇Arrows to change the field's value. Press ENT again to save settings.

Section 13: OPEN/CLOSE Setup Tree

Refer to **Section 6** on the steps needed to take to access this configuration tree

13.1 1-Wire Setup Screen

For more information on how 1-Wire functions refer back to Section 4.2. This screen is to set up the port that controls the functionality. The options are either OPEN or CLOSE as displayed on the J1 artwork of the keypad.

```
→OC→1-WIRE      1/5 ↓
J1 Port Used: OPEN
```

- **OPEN** - XCTRL monitors signal input on the OPEN terminal of J1.
- **CLOSE** - XCTRL monitors signal input on the CLOSE terminal of J1.

Press the ENT button to enter edit mode. Use ⇧/⇩Arrows to change each field's value. Press ENT again to save settings.

13.2 2-Wire Setup Screen

For more information on how 2-Wire functions refer back to Section 4.3. This screen is to configure how the XCTRL responds to the signal inputs.

```
→OC→2-WIRE      2/5↑↓
J1 Signal:CONTINUOUS
Both Inputs Off Pos:
        STAYPUT
```

As of firmware version 3.8.1 this screen allows for different types of control signals to be applied to the J1 port. That is set with the second line of this screen. The options for the J1 Signal type are:

```
J1 Signal:CONTINUOUS
```

```
J1 Signal: ONE-SHOT
```

1. **CONTINUOUS** - Send a continuous signal to either the OPEN or CLOSE port to hold the actuator in that position. If using this option, then a third position may be set for the actuator. If both inputs to the actuator are off, then a third position may be selected. Press the Right Arrow to access these options. The options for the third position are:
   - **STAYPUT** - Valve will stop at current position.
   - **CLOSE** - Valve moves to CLOSED position.
   - **OPEN** - Valve moves to OPEN position.
   - **FAILSAFE POSITION** - Valve moves to programmed position in FAILSAFE SETUP
   - **PERCENT OPEN** - Valve moves to X percent open
2. **ONE-SHOT** - If this option is chosen, instead of sending a continuous signal to keep the actuator in the CLOSE or OPEN position, you can send a pulse or use a button push to make the actuator move into the OPEN or CLOSE position. The length of the pulse that is accepted is controlled by the DI Noise Filter covered in Section 14.

Press the ENT button to enter edit mode. Use ⇦/⇨Arrows to move between the editable fields. Use ⇧/⇩Arrows to change each field's value. Press ENT again to save settings.

13.3 ON-OFF Setup Screen

For more information on how ON-OFF functions refer back to Section 4.7. This screen is to configure whether the actuator OPENS or CLOSES when power is applied to the power supply module.

```
→OC→ON/OFF      3/5↑↓
When Power ON: OPEN
```

- **OPEN** - Valve moves to OPEN position.
- **CLOSE** - Valve moves to CLOSED position.

Press the ENT button to enter edit mode. Use ⇧/⇩Arrows to change each field's value. Press ENT again to save settings.

Continued on next page…

13.4 OC Timer Control Setup Screen

```
→OC→Timer        4/5↑↓
 Override J1 Input:
          OFF
```

This screen allows for a timer to be set that will automatically override the signal input on J1. A use case for this would be if using a CONTINUOUS signal input on to the OPEN port of J1 and the operator forgets to turn the signal off. In normal cases, this could cause a spill. If this timer was enabled, then if that operator forgot to turn off the CONTINUOUS signal, then once the timer counted down to 0, the valve would automatically move to the CLOSE position preventing any spill.

In 1-WIRE mode, the overridden signal will stay latched until that signal has been turned off. When the signal is next enabled, the timer will start counting down from the programmed amount of time.

In 2-Wire mode, the overridden signal will stay latched until the other signal is applied. If overriding the OPEN, then after the timer expires the OPEN will be overridden and the valve will move to the CLOSED position. It will stay in the closed position ignoring the OPEN signal until a control signal has been applied to the CLOSE terminal on J1.

If a timer has been set it will be apparent from the home screen as the bottom line will show the following as it counts down:

```
Auto CLOSE → 00m:55s
```

**Note it will display as Auto OPEN if overriding the CLOSE port*

And once the timer has ended, the following will be displayed until the signal has been unlatched:

```
J1 OC Override CLOSE
```

**Note it will display as Override OPEN if overriding the CLOSE port*

- **Override J1 Input -** Set to OFF or for a timer of 1 to 60 minutes in length.
- **On Time Expire -** Set whether the valve will OPEN or CLOSE once the timer has expired.

Press the ENT button to enter edit mode. Use ←/→ Arrows to move between the editable fields. Use ↑/↓ Arrows to change each field's value. Press ENT again to save settings.

13.5 OC Input Delay Setup Screen

```
→OC→Inp Delay   5/5↑↓
Delay J1 Input:    0s
```

This screen allows for a delay to be applied to the input on the J1 port. Useful if you have a noisy control signal or if needing the valve to delay movement to match another sequence. If using two actuators off of a single control wire, one could have an input applied so that it always OPEN/CLOSES within a certain amount of time of the other actuator.

If an INPUT DELAY has been enabled then the bottom line of the home screen will display a message any time the signal control is turned ON or OFF. This means that if a 5 second delay is set that it will effect both the OPEN and CLOSE input. The message shown on the home screen will looks like this:

```
OC Input Delay → 30s
```

- **Delay J1 Input -** Set the input delay from 0-30 seconds.

Press the ENT button to enter edit mode. Use ↑/↓ Arrows to change each field's value. Press ENT again to save settings.

Section 14: Wifi Setup Tree

UNDER DEVELOPMENT

Section 15: Factory Setup Tree

Refer to **Section 6** on the steps needed to take to access this configuration tree

15.1 Restore Defaults Screen

This screen is used to either restore all settings to factory setup, or to clear the current calibration end points. Follow on screen prompt to perform desired operation.

```
→FS→Restore     1/4 ↓
Restore System [ENT]
Clear Pos Cal  [CCW]
```

15.2 Keypad Test Screen

This screen is used to test all the keypad buttons. Follow on screen prompts. Hold ESC button to exit test

```
→FS→Key Test    2/4↑↓

Hold [ENT] to BEGIN
Hold [ESC] to EXIT
```

15.3 4-20 Loopback Test Screen

This screen is used to test the 4-20mA(J2) Input and Output circuits. This can be helpful if there's a question as to whether or not the Signal Control circuit is operational. Follow on screen prompts. Add a jumper wire between J2 IN+ and J2 OUT+. Press ESC button to exit test

```
→FS→4-20 Test   3/4↑↓
Jumper wire from
J2 IN+ to J2 OUT+
Hit [ENT] to BEGIN.
```

15.4 Mac Address Screen

This screen is normally purely informational and displays the physical address of the ethernet phy on the XCTRL. It also shows a lot number which allows for traceability of when the controller was manufactured in our facility.

```
→FS→MAC Addr    4/4 ↑
US:00:00:00:00:00:00

LOT#: 37655
```

Section 16: Manual Override Handle Option

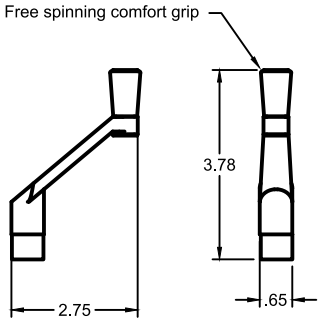

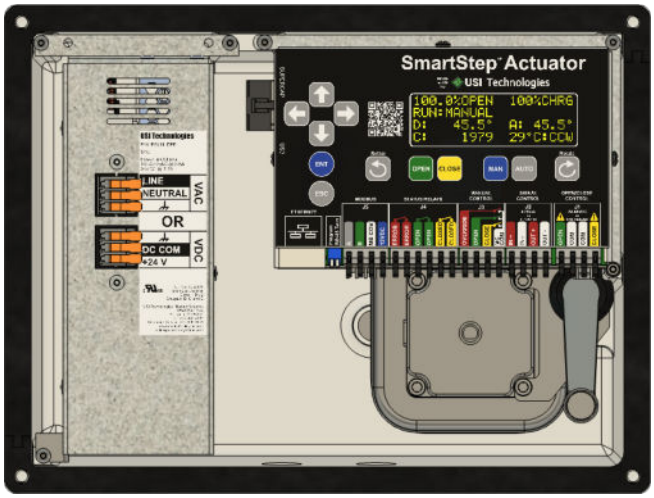

The manual override handle allows for the actuator to OPEN/CLOSE a valve during total power outage. The handle will be mounted on the right-hand side of both the X-Series and S-Series gearbox motors as shown to the right.

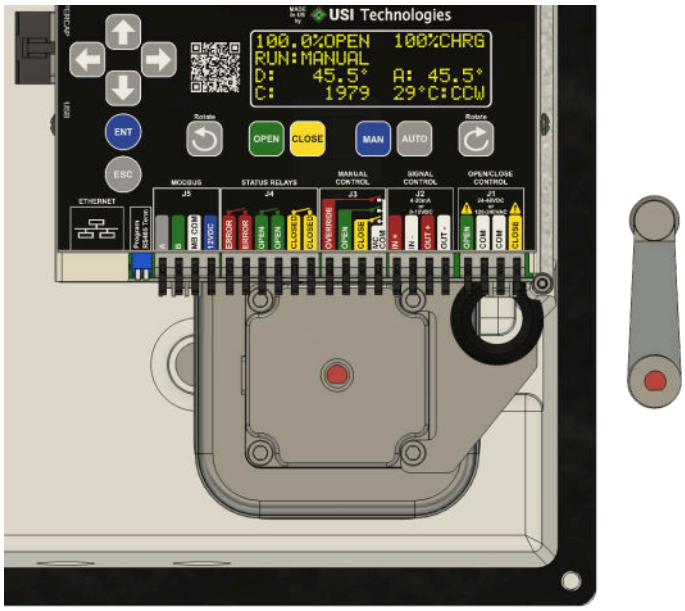

Remove handle from the mount by pulling upwards. Push against the mount if necessary.

Once removed, align the bottom Female-D of the handle onto the shaft protruding from the motor.

Both have been colored red in the image for visibility.

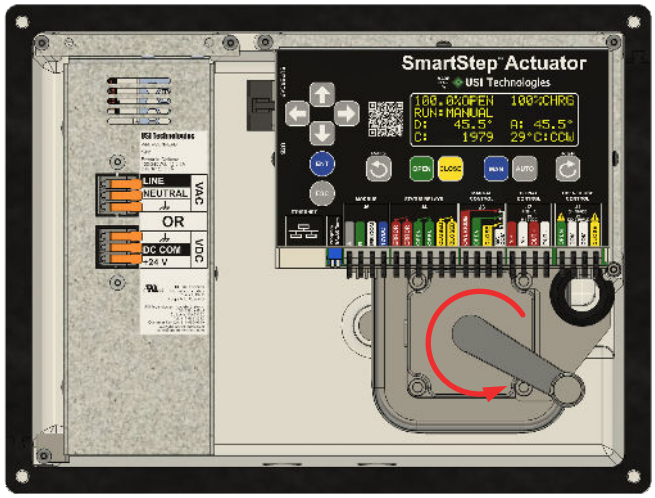

Spin the handle to move the actuator in the desired direction.

For S0400 & X2500 Models, the output shaft will move in the same direction as you spin the handle

For all other models, the output shaft will move in the opposite direction as you spin the handle.

Example to the right: An X1200 needs to be CLOSED. To close the valve in the CLOCKWISE position, spin the handle in the COUNTER-CLOCKWISE direction.

Section 17: XCTRL Fault Codes

17.1 Error fault codes

Fault Code	Cause	Options to Remedy
MAGNET–RANGE POS-SENSOR MOTOR-STALLED	All of these errors relate to the XCTRL being able to see movement on the shaft when sending an output to the motor to move. It means that either the shaft is not moving or is moving in a way not expected by the XCTRL.	1. Verify valve/shaft movement. If no movement ensure there is no blockage in the valve. 2. Verify model on SmartStep label matches model set in XCTRL by pressing the left arrow from the home screen. If model matches, there's no movement in either direction, first component to try to swap would be a new XCTRL. If a new XCTRL doesn't clear the problem then the full actuator should be evaluated.
CALIBRATE POSITION	XCTRL still has the factory default calibration numbers set.	Set the end points.
420-NOCONNECT	XCTRL is in 4-20 Auto mode but does not see a valid signal.	Use a multimeter or 4-20 loop calibrator to verify the signal being sent to the XCTRL. If a valid signal (within the 4-20mA range) is present, then a new further troubleshooting or a new XCTRL may be necessary.
OC-NOCONNECT	XCTRL is in 2-Wire Auto mode but does not see a valid signal	Ensure proper signal voltage is at the input. 24-48VDC or 120-240 VAC. If voltage is there, try to send the OPEN command and see if a + appears next OPN on the home screen. Do the same with the CLOSE command. If no + shows up next to either on the home screen then likely there was damage done to the J1 port and a new XCTRL will be needed.
MBCOM-TIMEOUT	XCTRL is in MB-TCP Auto mode but does not see valid communication.	Verify all settings related to MODBUS-TCP. Test software/templates are available here to verify communication between XCTRL and PC
SCAP-COM-LOST	Actuator is set up as a -EPB model but does not see Super Cap communication	Verify that connector on left side of the XCTRL is plugged in with no damage to any of the wires. If all looks well then would need to try either new XCTRL, PSUNI or PS024 depending on model.
MAIN-POWER-LOST	Actuator has Super Cap back-up and Super Cap no longer sees input power >20VDC	Check voltage into PSUNI/PS024 power input terminal
MODEL NOT SELECTED	Actuator model has not been set up in the XCTRL.	Set up actuator model as shown in section 2.8 of this user manual.
NO MAC ADDRESS SET	Valid MAC address not set in unit.	Only an issue if using MODBUS TCP and should always be set by factory. The only time this error should appear is if an XCTRL module from mid-2022 or before is upgraded with new firmware.

Section 18: Troubleshooting

18.1 General Issues

Symptom	Possible Causes/Remedies
Actuator won't power on	1. Ensure voltage is within range on label and present at terminal block on the PS024 or PSUNI. 2. Unplug power connector from bottom right hand corner of XCTRL. With voltage applied to the PSUNI/PS024 the voltage on this plug should be 48VDC. If that voltage is not 48VDC but voltage has been verified on the terminal block, then it's likely the PSUNI/PS024 has been damaged and needs to be replaced.
Actuator powers on but doesn't stay powered	1. Ensure power supply has proper amperage rating for the actuator. The 24VDC input needs to be at least 3.3A. 120VAC input needs to be at least .67A 2. Ensure that wires going into terminal block and PSUNI/PS024 and the connector on bottom right hand corner of the XCTRL are secured properly.
Display Glitches or Random Button Presses	So far almost every instance of a display or XCTRL having erratic functionality has been due to EMI conducted through the power input/control signal input wires. Adding ferrites to the input cables or isolating the high/low voltage lines should remedy this.
Actuator turns valve in opposite direction of signal being supplied	1. Check voltage to terminal block between COM and port that should be live to ensure proper wiring 2. Reference section 7.3 and ensure that OPEN direction is properly set
Actuator seems to have less holding torque when not in motion	Ensure that POWER SAVE MODE has not been enabled on the **POWER MANAGEMENT** settings screen. If it has, then switch setting to TEMP CONTROL or HOLDING TORQUE mode.

18.2 J1 OPEN/CLOSE Issues

Symptom	Possible Causes/Remedies
Actuator won't turn when command signal is sent from panel	1. Ensure proper command signal voltage across the COM and the OPEN or CLOSE port. If 24-48VDC or 100-240VAC is present, then on the screen a + should appear by whichever signal is currently being supplied. If a + is not being shown by the OPN or CLS on the main screen but proper voltage is being measured, it's possible the port was damaged. This has only been observed to happen during lightning storms. If this is the case, a new XCTRL module will be needed. 2. SmartStep not set in 1-Wire or 2Wire mode. Press the Auto button on the screen to cycle to proper mode. Press ENT to select. 3. Check motor connection (connection near the bottom left hand corner of the XCTRL) and ensure that it is properly seated

18.3 4-20mA/0-10VDC Issues

Symptom	Possible Causes/Remedies
My panel is outputting 20mA/4mA but the SmartStep is showing less than that	More likely than not this is just a long wire run issue. It can be solved by simply performing a 4-20mA calibration as shown in section 8.1. If the SmartStep OPEN or CLOSE position is calibrated to what your panel is supplying, it will treat that signal as a full 4mA or 20mA so that the actuator fully opens and closes as expected.
Using 0-10VDC but when applying 0VDC the actuator shows a fault	Versions 4.0.0 of software and earlier don't have an actual 0-10VDC mode as of yet. That will be implemented in the future. If that is the mode that you need to use, try to use 2VDC as the CLOSE signal and the fault should go away as it is roughly 4mA when converted through our ADC.
Actuator 4-20mA feedback is not as expected when the signal is received at our panel	The 4-20mA feedback is able to be calibrated and output different values as needed. Refer to section 8.2 on performing a DAC calibration. When doing this calibration for this reason, instead of having an Ammeter at the unit, have the panel operator read the values as they're adjusted so that you know when they are within acceptable range of your panel.

18.4 MODBUS Issues

Symptom	Possible Causes/Remedies
It isn't working	With MODBUS requiring a higher attention to detail to properly function and having so many different variables, the best support that we can offer is found at this LINK. Here you will find instructions, software, and workspaces for MODBUS Poll. It is how we test and verify MODBUS functionality on before shipping product. Follow the directions in ModbusPollingSetup.docx. Use this to test the SmartStep actuator and from there backtrack through the other devices in your network to find the issue.